FAIRCHILD SEMICONDUCTOR®

February 1994
Revised October 2005

74LCX373

Low Voltage Octal Transparent Latch with 5V Tolerant Inputs and Outputs

General Description

The LCX373 consists of eight latches with 3-STATE outputs for bus organized system applications. The device is designed for low voltage (3.3V or 2.5V) V_{CC} applications with capability of interfacing to a 5V signal environment.

The LCX373 is fabricated with an advanced CMOS technology to achieve high speed operation while maintaining CMOS low power dissipation.

Features

- 5V tolerant inputs and outputs
- 2.3V–3.6V V_{CC} specifications provided
- 8.0 ns t_{PD} max (V_{CC} = 3.3V), 10 μA I_{CC} max
- Power-down high impedance inputs and outputs
- Supports live insertion/withdrawal (Note)
- ±24 mA output drive (V_{CC} = 3.0V)
- Implements patented noise/EMI reduction circuitry
- Latch-up performance exceeds JEDEC 78 conditions
- ESD performance:
  - Human Body Model > 2000V
  - Machine Model > 200V
- Leadless Pb-Free DQFN package

Note 1: To ensure the high-impedance state during power up or down, $\overline{OE}$ should be tied to V_{CC} through a pull-up resistor: the minimum value or the resistor is determined by the current-sourcing capability of the driver.

Ordering Code:

Order Number	Package Number	Package Description
74LCX373WM	M20B	20-Lead Small Outline Integrated Circuit (SOIC), JEDEC MS-013, 0.300" Wide
74LCX373SJ	M20D	Pb-Free 20-Lead Small Outline Package (SOP), EIAJ TYPE II, 5.3mm Wide
74LCX373BQX (Preliminary) (Note 2)	MLP020B	Pb-Free 20-Terminal Depopulated Quad Very-Thin Flat Pack No Leads (DQFN), JEDEC MO-241, 2.5 x 4.5mm
74LCX373MSA	MSA20	20-Lead Shrink Small Outline Package (SSOP), JEDEC MO-150, 5.3mm Wide
74LCX373MTC	MTC20	20-Lead Thin Shrink Small Outline Package (TSSOP), JEDEC MO-153, 4.4mm Wide
74LCX373MTCX_NL (Note 3)	MTC20	Pb-Free 20-Lead Thin Shrink Small Outline Package (TSSOP), JEDEC MO-153, 4.4mm Wide

Devices also available in Tape and Reel. Specify by appending suffix letter "X" to the ordering code.
Pb-Free package per JEDEC J-STD-020B.

Note 2: DQFN package available in Tape and Reel only.

Note 3: "_NL" indicates Pb-Free package (per JEDEC J-STD-020B). Device available in Tape and Reel only.

© 2005 Fairchild Semiconductor Corporation

Logic Symbols

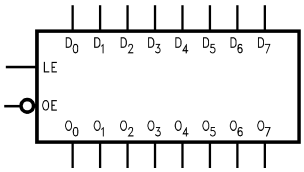

IEEE/IEC

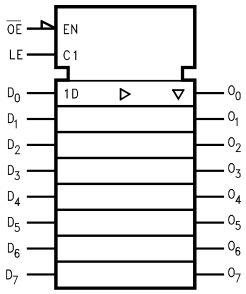

Connection Diagrams

Pin Assignments for SOIC, SOP, SSOP, TSSOP

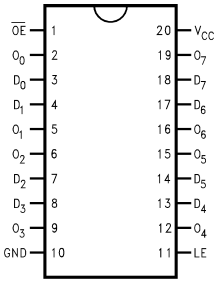

Pad Assignments for DQFN

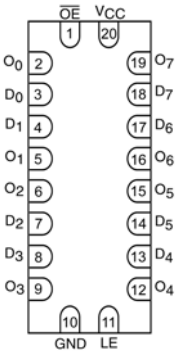

(Top View)

Pin Descriptions

Pin Names	Description
D_0–D_7	Data Inputs
LE	Latch Enable Input
$\overline{OE}$	Output Enable Input
O_0–O_7	3-STATE Latch Outputs

Truth Table

Inputs			Outputs
LE	**$\overline{OE}$**	**D_n**	**O_n**
X	H	X	Z
H	L	L	L
H	L	H	H
L	L	X	O_0

H = HIGH Voltage Level
L = LOW Voltage Level
Z = High Impedance
X = Immaterial
O_0 = Previous O_0 before HIGH-to-LOW transition of Latch Enable

Functional Description

The LCX373 contains eight D-type latches with 3-STATE standard outputs. When the Latch Enable (LE) input is HIGH, data on the D_n inputs enters the latches. In this condition the latches are transparent, i.e. a latch output will change state each time its D input changes. When LE is LOW, the latches store the information that was present on the D inputs a setup time preceding the HIGH-to-LOW transition of LE. The 3-STATE standard outputs are controlled by the Output Enable ($\overline{OE}$) input. When $\overline{OE}$ is LOW, the standard outputs are in the 2-state mode. When $\overline{OE}$ is HIGH, the standard outputs are in the high impedance mode but this does not interfere with entering new data into the latches.

Logic Diagram

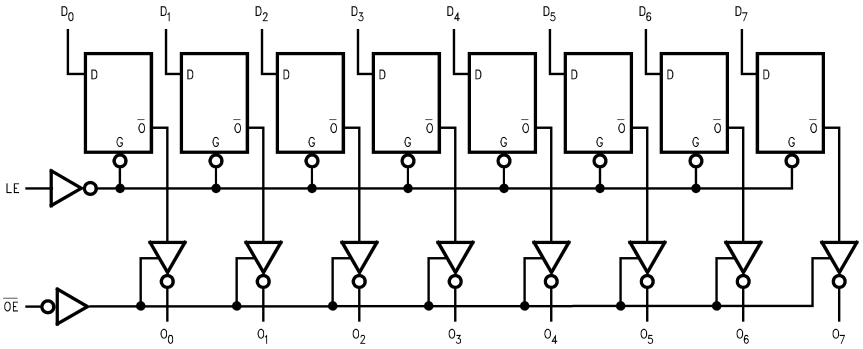

Please note that this diagram is provided only for the understanding of logic operations and should not be used to estimate propagation delays.

Absolute Maximum Ratings (Note 4)

Symbol	Parameter	Value	Conditions	Units
V_{CC}	Supply Voltage	−0.5 to +7.0		V
V_I	DC Input Voltage	−0.5 to +7.0		V
V_O	DC Output Voltage	−0.5 to +7.0 −0.5 to V_{CC} + 0.5	Output in 3-STATE Output in HIGH or LOW State (Note 5)	V
I_{IK}	DC Input Diode Current	−50	V_I < GND	mA
I_{OK}	DC Output Diode Current	−50 +50	V_O < GND V_O > V_{CC}	mA
I_O	DC Output Source/Sink Current	±50		mA
I_{CC}	DC Supply Current per Supply Pin	±100		mA
I_{GND}	DC Ground Current per Ground Pin	±100		mA
T_{STG}	Storage Temperature	−65 to +150		°C

Recommended Operating Conditions (Note 6)

Symbol	Parameter		Min	Max	Units
V_{CC}	Supply Voltage	Operating Data Retention	2.0 1.5	3.6 3.6	V
V_I	Input Voltage		0	5.5	V
V_O	Output Voltage	HIGH or LOW State 3-STATE	0 0	V_{CC} 5.5	V
I_{OH}/I_{OL}	Output Current	V_{CC} = 3.0V − 3.6V V_{CC} = 2.7V − 3.0V V_{CC} = 2.3V − 2.7V		±24 ±12 ±8	mA
T_A	Free-Air Operating Temperature		−40	85	°C
$\Delta t/\Delta V$	Input Edge Rate, V_{IN} = 0.8V − 2.0V, V_{CC} = 3.0V		0	10	ns/V

Note 4: The Absolute Maximum Ratings are those values beyond which the safety of the device cannot be guaranteed. The device should not be operated at these limits. The parametric values defined in the Electrical Characteristics tables are not guaranteed at the Absolute Maximum Ratings. The "Recommended Operating Conditions" table will define the conditions for actual device operation.

Note 5: I_O Absolute Maximum Rating must be observed.

Note 6: Unused inputs must be held HIGH or LOW. They may not float.

DC Electrical Characteristics

Symbol	Parameter	Conditions	V_{CC} (V)	T_A = −40°C to +85°C Min	Max	Units
V_{IH}	HIGH Level Input Voltage		2.3 – 2.7	1.7		V
			2.7 – 3.6	2.0		
V_{IL}	LOW Level Input Voltage		2.3 – 2.7		0.7	V
			2.7 – 3.6		0.8	
V_{OH}	HIGH Level Output Voltage	I_{OH} = −100 μA	2.3 – 3.6	V_{CC} − 0.2		V
		I_{OH} = −8 mA	2.3	1.8		
		I_{OH} = −12 mA	2.7	2.2		
		I_{OH} = −18 mA	3.0	2.4		
		I_{OH} = −24 mA	3.0	2.2		
V_{OL}	LOW Level Output Voltage	I_{OL} = 100 μA	2.3 – 3.6		0.2	V
		I_{OL} = 8 mA	2.3		0.6	
		I_{OL} = 12 mA	2.7		0.4	
		I_{OL} = 16 mA	3.0		0.4	
		I_{OL} = 24 mA	3.0		0.55	
I_I	Input Leakage Current	0 ≤ V_I ≤ 5.5V	2.3 – 3.6		±5.0	μA
I_{OZ}	3-STATE Output Leakage	0 ≤ V_O ≤ 5.5V V_I = V_{IH} or V_{IL}	2.3 – 3.6		±5.0	μA
I_{OFF}	Power-Off Leakage Current	V_I or V_O = 5.5V	0		10	μA
I_{CC}	Quiescent Supply Current	V_I = V_{CC} or GND	2.3 – 3.6		10	μA
		3.6V ≤ V_I, V_O ≤ 5.5V (Note 7)	2.3 – 3.6		±10	

DC Electrical Characteristics (Continued)

Symbol	Parameter	Conditions	V_{CC} (V)	$T_A = -40°C$ to $+85°C$		Units
				Min	Max	
ΔI_{CC}	Increase in I_{CC} per Input	$V_{IH} = V_{CC} - 0.6V$	2.3 – 3.6		500	μA

Note 7: Outputs disabled or 3-STATE only.

AC Electrical Characteristics

Symbol	Parameter	$T_A = -40°C$ to $+85°C$, $R_L = 500\Omega$						Units
		$V_{CC} = 3.3V \pm 0.3V$		$V_{CC} = 2.7V$		$V_{CC} = 2.5V \pm 0.2V$		
		$C_L = 50pF$		$C_L = 50pF$		$C_L = 30pF$		
		Min	Max	Min	Max	Min	Max	
t_{PHL}	Propagation Delay	1.5	8.0	1.5	9.0	1.5	9.6	ns
t_{PLH}	D_n to O_n	1.5	8.0	1.5	9.0	1.5	9.6	
t_{PHL}	Propagation Delay	1.5	8.5	1.5	9.5	1.5	10.5	ns
t_{PLH}	LE to O_n	1.5	8.5	1.5	9.5	1.5	10.5	
t_{PZL}	Output Enable Time	1.5	8.5	1.5	9.5	1.5	10.5	ns
t_{PZH}		1.5	8.5	1.5	9.5	1.5	10.5	
t_{PLZ}	Output Disable Time	1.5	7.5	1.5	8.5	1.5	9.0	ns
t_{PHZ}		1.5	7.5	1.5	8.5	1.5	9.0	
t_S	Setup Time, D_n to LE	2.5		2.5		4.0		ns
t_H	Hold Time, D_n to LE	1.5		1.5		2.0		ns
t_W	LE Pulse Width	3.3		3.3		4.0		ns
t_{OSHL}	Output to Output Skew		1.0					ns
t_{OSLH}	(Note 8)		1.0					

Note 8: Skew is defined as the absolute value of the difference between the actual propagation delay for any two separate outputs of the same device. The specification applies to any outputs switching in the same direction, either HIGH-to-LOW (t_{OSHL}) or LOW-to-HIGH (t_{OSLH}).

Dynamic Switching Characteristics

Symbol	Parameter	Conditions	V_{CC} (V)	$T_A = 25°C$	Units
				Typical	
V_{OLP}	Quiet Output Dynamic Peak V_{OL}	$C_L = 50$ pF, $V_{IH} = 3.3V$, $V_{IL} = 0V$	3.3	0.8	V
		$C_L = 30$pF, $V_I = 2.5V$, $V_{IL} = 0V$	2.5	0.6	
V_{OLV}	Quiet Output Dynamic Valley V_{OL}	$C_L = 50$ pF, $V_{IH} = 3.3V$, $V_{IL} = 0V$	3.3	–0.8	V
		$C_L = 30$pF, $V_I = 2.5V$, $V_{IL} = 0V$	2.5	–0.6	

Capacitance

Symbol	Parameter	Conditions	Typical	Units
C_{IN}	Input Capacitance	V_{CC} = Open, $V_I = 0V$ or V_{CC}	7	pF
C_{OUT}	Output Capacitance	$V_{CC} = 3.3V$, $V_I = 0V$ or V_{CC}	8	pF
C_{PD}	Power Dissipation Capacitance	$V_{CC} = 3.3V$, $V_I = 0V$ or V_{CC}, f = 10 MHz	25	pF

AC LOADING and WAVEFORMS Generic for LCX Family

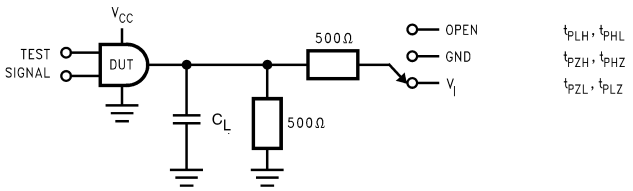

FIGURE 1. AC Test Circuit (C_L includes probe and jig capacitance)

Test	Switch
t_{PLH}, t_{PHL}	Open
t_{PZL}, t_{PLZ}	6V at V_{CC} = 3.3 ± 0.3V V_{CC} x 2 at V_{CC} = 2.5 ± 0.2V
t_{PZH},t_{PHZ}	GND

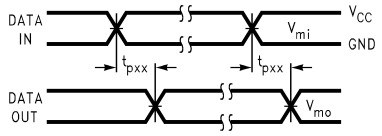

Waveform for Inverting and Non-Inverting Functions

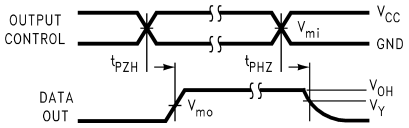

3-STATE Output High Enable and Disable Times for Logic

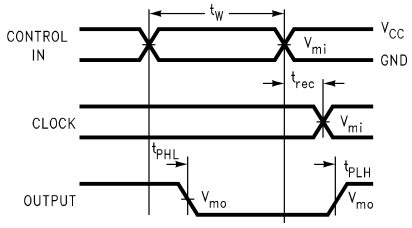

Propagation Delay. Pulse Width and t_{rec} Waveforms

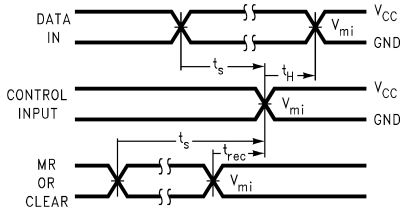

Setup Time, Hold Time and Recovery Time for Logic

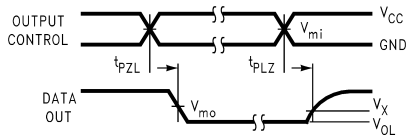

3-STATE Output Low Enable and Disable Times for Logic

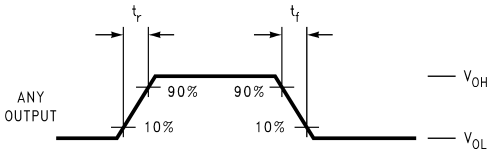

t_{rise} and t_{fall}

FIGURE 2. Waveforms
(Input Characteristics; f =1MHz, t_r = t_f = 3ns)

Symbol	V_{CC}		
	3.3V ± 0.3V	2.7V	2.5V ± 0.2V
V_{mi}	1.5V	1.5V	V_{CC}/2
V_{mo}	1.5V	1.5V	V_{CC}/2
V_x	V_{OL} + 0.3V	V_{OL} + 0.3V	V_{OL} + 0.15V
V_y	V_{OH} − 0.3V	V_{OH} − 0.3V	V_{OH} − 0.15V

Schematic Diagram Generic for LCX Family

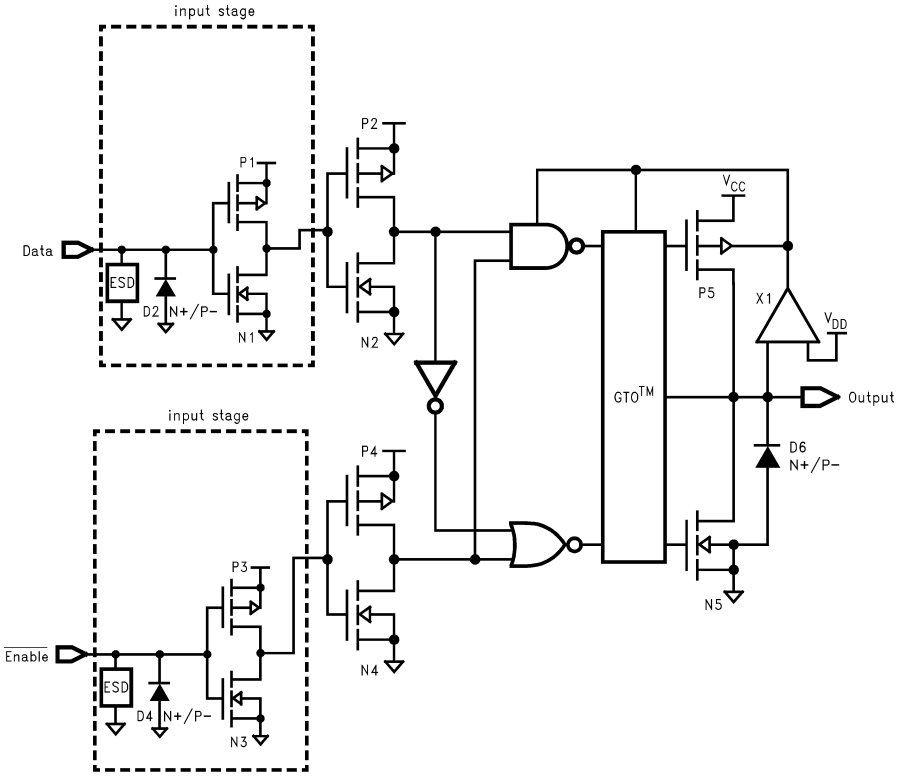

Tape and Reel Specification

Tape Format for DQFN

Package Designator	Tape Section	Number Cavities	Cavity Status	Cover Tape Status
BQX	Leader (Start End)	125 (typ)	Empty	Sealed
	Carrier	3000	Filled	Sealed
	Trailer (Hub End)	75 (typ)	Empty	Sealed

TAPE DIMENSIONS inches (millimeters)

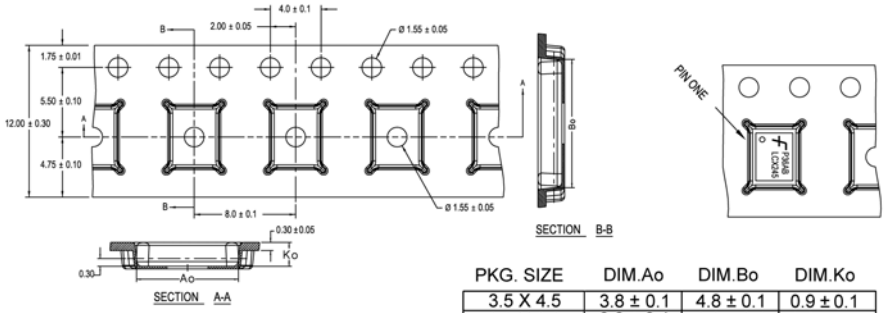

PKG. SIZE	DIM.Ao	DIM.Bo	DIM.Ko
3.5 X 4.5	3.8 ± 0.1	4.8 ± 0.1	0.9 ± 0.1
3.0 X 3.0	3.3 ± 0.1	3.3 ± 0.1	0.9 ± 0.1
2.5 X 4.5	2.8 ± 0.1	4.8 ± 0.1	0.9 ± 0.1
2.5 X 3.5	2.8 ± 0.1	3.8 ± 0.1	0.9 ± 0.1
2.5 X 3.0	2.8 ± 0.1	3.3 ± 0.1	0.9 ± 0.1
2.5 X 2.5	2.8 ± 0.1	2.8 ± 0.1	0.9 ± 0.1

DIMENSIONS ARE IN MILLIMETERS

NOTES: unless otherwise specified

1. Cummulative pitch for feeding holes and cavities (chip pockets) not to exceed 0.008[0.20] over 10 pitch span.
2. Smallest allowable bending radius.
3. Thru hole inside cavity is centered within cavity.
4. Tolerance is ±0.002[0.05] for these dimensions on all 12mm tapes.
5. Ao and Bo measured on a plane 0.120[0.30] above the bottom of the pocket.
6. Ko measured from a plane on the inside bottom of the pocket to the top surface of the carrier.
7. Pocket position relative to sprocket hole measured as true position of pocket. Not pocket hole.
8. Controlling dimension is millimeter. Diemension in inches rounded.

REEL DIMENSIONS inches (millimeters)

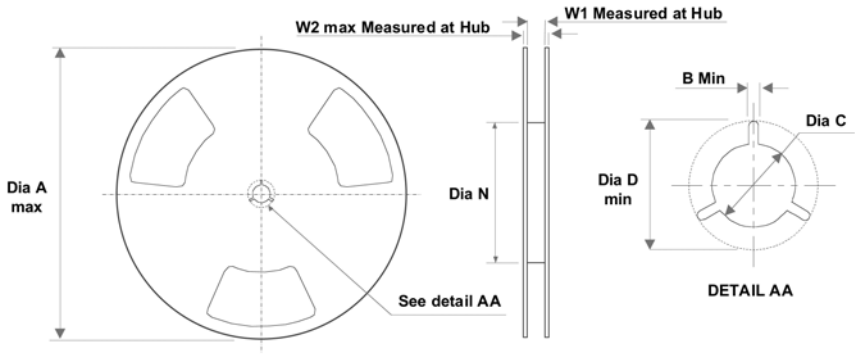

Tape Size	A	B	C	D	N	W1	W2
12 mm	13.0 (330.0)	0.059 (1.50)	0.512 (13.00)	0.795 (20.20)	2.165 (55.00)	0.488 (12.4)	0.724 (18.4)

Physical Dimensions inches (millimeters) unless otherwise noted

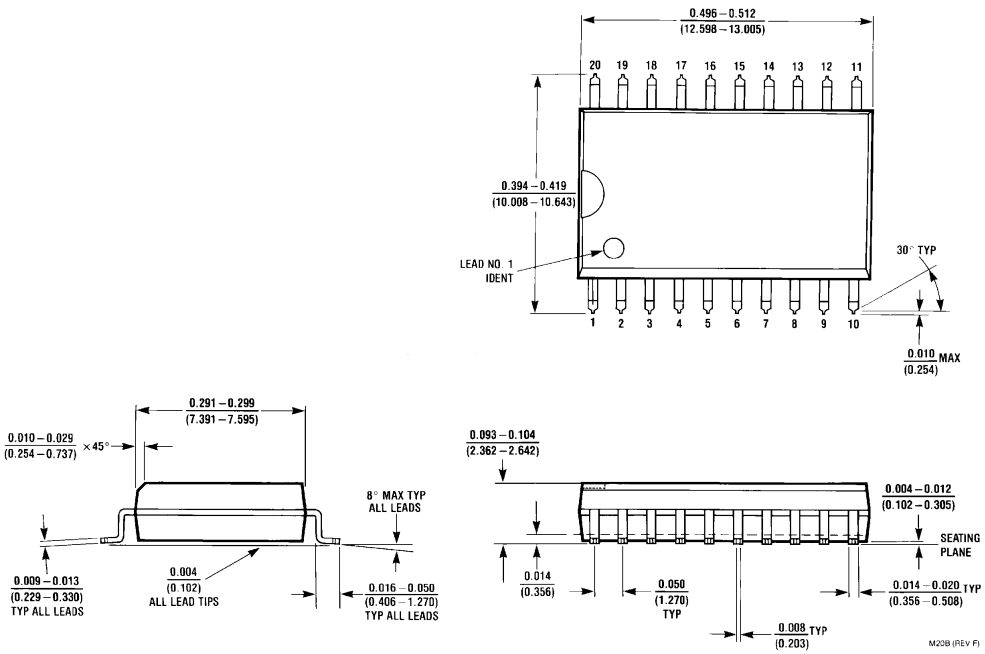

20-Lead Small Outline Integrated Circuit (SOIC), JEDEC MS-013, 0.300" Wide
Package Number M20B

Physical Dimensions inches (millimeters) unless otherwise noted (Continued)

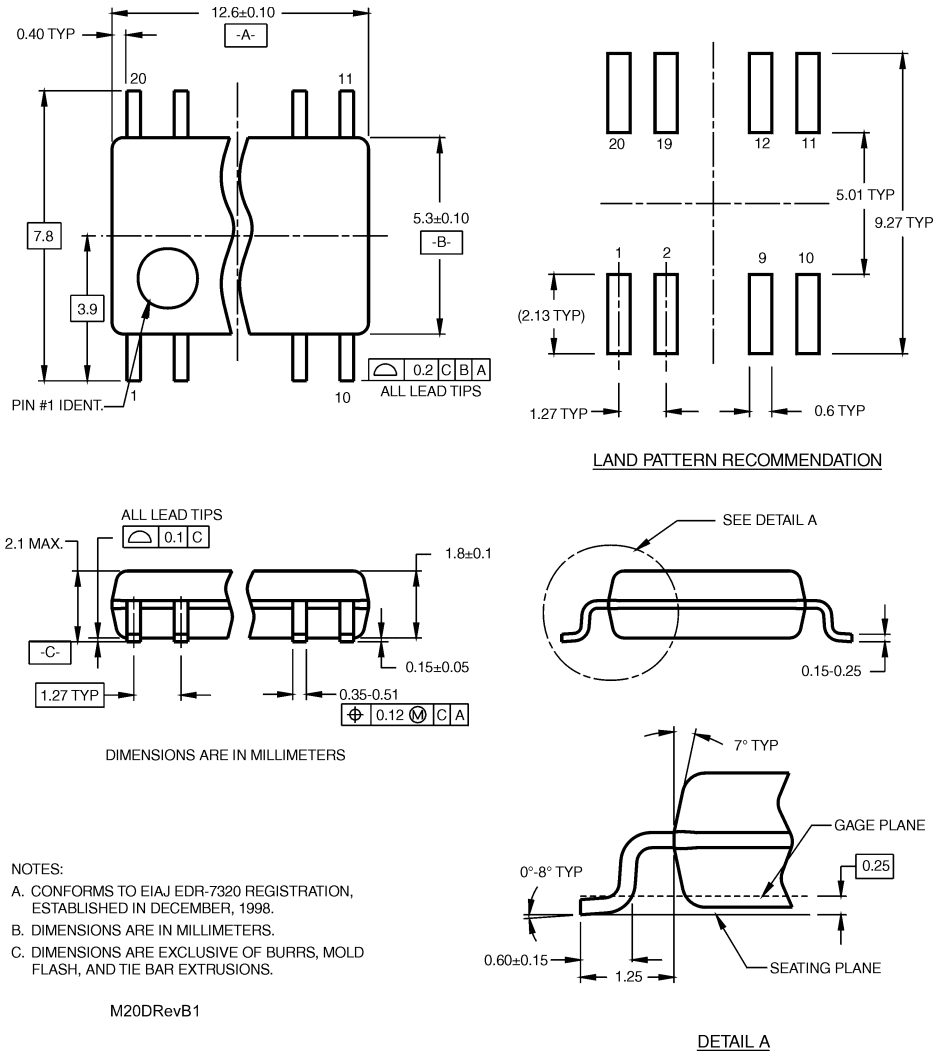

NOTES:

A. CONFORMS TO EIAJ EDR-7320 REGISTRATION, ESTABLISHED IN DECEMBER, 1998.

B. DIMENSIONS ARE IN MILLIMETERS.

C. DIMENSIONS ARE EXCLUSIVE OF BURRS, MOLD FLASH, AND TIE BAR EXTRUSIONS.

M20DRevB1

Pb-Free 20-Lead Small Outline Package (SOP), EIAJ TYPE II, 5.3mm Wide
Package Number M20D

Physical Dimensions inches (millimeters) unless otherwise noted (Continued)

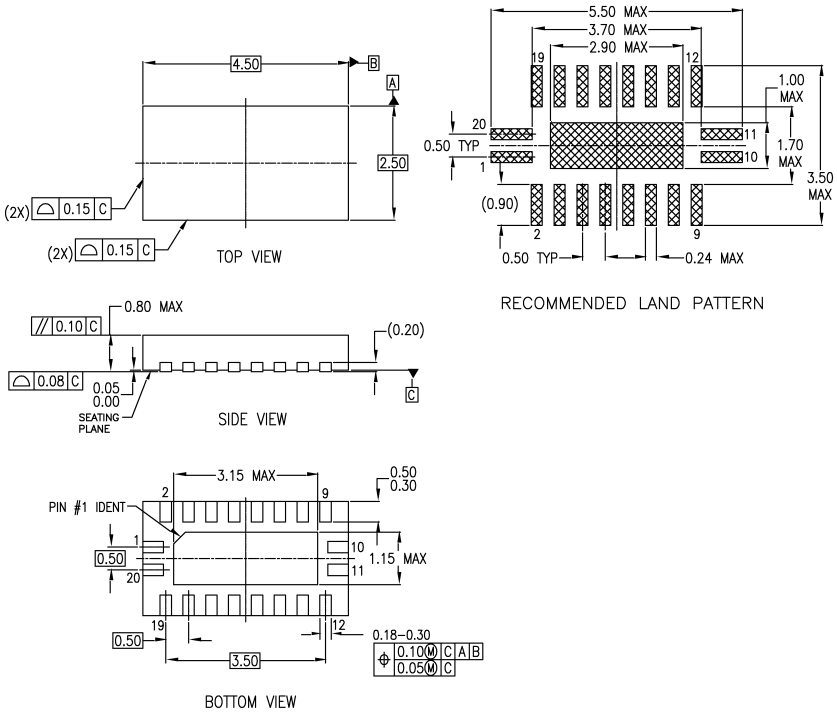

NOTES:

A. CONFORMS TO JEDEC REGISTRATION MO–241, VARIATION AC
B. DIMENSIONS ARE IN MILLIMETERS.
C. DIMENSIONS AND TOLERANCES PER ASME Y14.5M, 1994

MLP020BrevA

Pb-Free 20-Terminal Depopulated Quad Very-Thin Flat Pack No Leads (DQFN), JEDEC MO-241, 2.5 x 4.5mm
Package Number MLP020B

Physical Dimensions inches (millimeters) unless otherwise noted (Continued)

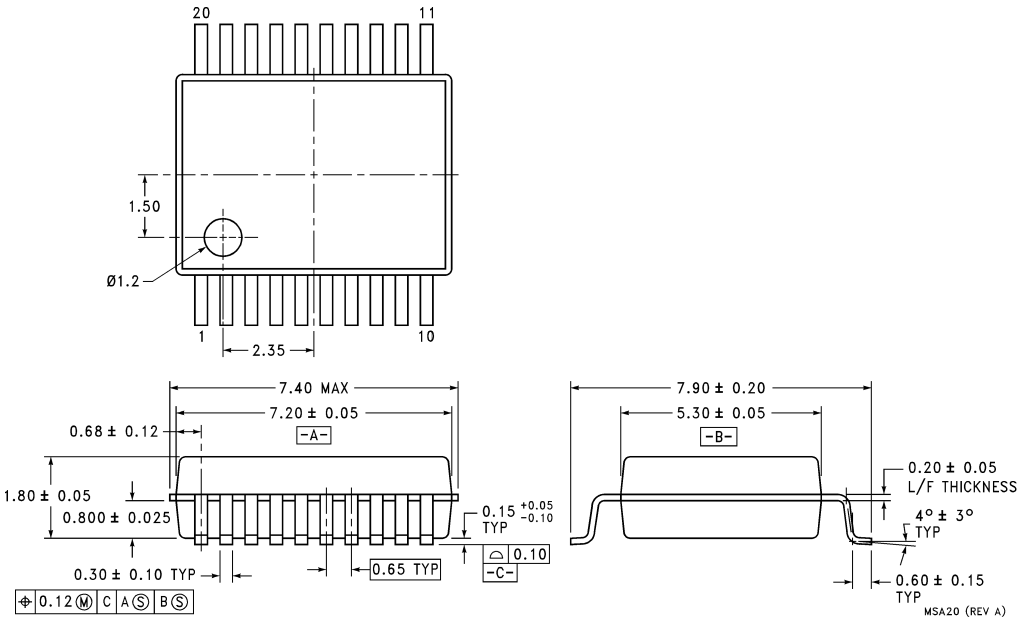

20-Lead Shrink Small Outline Package (SSOP), JEDEC MO-150, 5.3mm Wide
Package Number MSA20

Physical Dimensions inches (millimeters) unless otherwise noted (Continued)

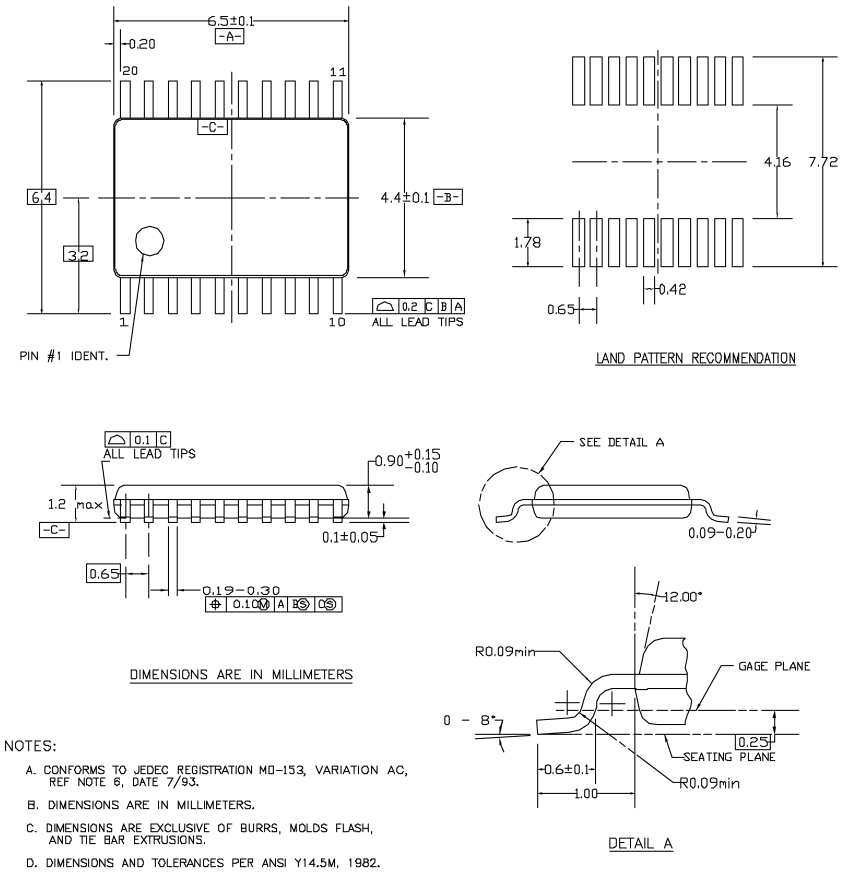

20-Lead Thin Shrink Small Outline Package (TSSOP), JEDEC MO-153, 4.4mm Wide
Package Number MTC20

DISCLAIMER

FAIRCHILD SEMICONDUCTOR RESERVES THE RIGHT TO MAKE CHANGES WITHOUT FURTHER NOTICE TO ANY PRODUCTS HEREIN TO IMPROVE RELIABILITY, FUNCTION OR DESIGN. FAIRCHILD DOES NOT ASSUME ANY LIABILITY ARISING OUT OF THE APPLICATION OR USE OF ANY PRODUCT OR CIRCUIT DESCRIBED HEREIN; NEITHER DOES IT CONVEY ANY LICENSE UNDER ITS PATENT RIGHTS, NOR THE RIGHTS OF OTHERS.

LIFE SUPPORT POLICY

FAIRCHILD'S PRODUCTS ARE NOT AUTHORIZED FOR USE AS CRITICAL COMPONENTS IN LIFE SUPPORT DEVICES OR SYSTEMS WITHOUT THE EXPRESS WRITTEN APPROVAL OF FAIRCHILD SEMICONDUCTOR CORPORATION

As used herein:

1. Life support devices or systems are devices or systems which, (a) are intended for surgical implant into the body, or (b) support or sustain life, or (c) whose failure to perform when properly used in accordance with instructions for use provided in the labeling, can be reasonably expected to result in significant injury to the user.

2. A critical component is any component of a life support device or system whose failure to perform can be reasonably expected to cause the failure of the life support device or system, or to affect its safety or effectiveness.

PRODUCT STATUS DEFINITIONS

Definition of terms

Datasheet Identification	Product Status	Definition
Advance Information	Formative or In Design	This datasheet contains the design specifications for product development. Specifications may change in any manner without notice.
Preliminary	First Production	This datasheet contains preliminary data, and supplementary data will be published at a later date. Fairchild Semiconductor reserves the right to make changes at any time without notice in order to improve design.
No Identification Needed	Full Production	This datasheet contains final specifications. Fairchild Semiconductor reserves the right to make changes at any time without notice in order to improve design.
Obsolete	Not In Production	This datasheet contains specifications on a product that has been discontinued by Fairchild Semiconductor. The datasheet is printed for reference information only.