Dual Latch

MC10H130

The MC10H130 is a MECL 10H part which is a functional/pinout duplication of the standard MECL 10K family part, with 100% improvement in clock speed and propagation delay and no increase in power–supply current.

- Propagation Delay, 1.0 ns Typical
- Power Dissipation, 155 mW Typical
- Improved Noise Margin 150 mV (Over Operating Voltage and Temperature Range)
- Voltage Compensated
- MECL 10K–Compatible

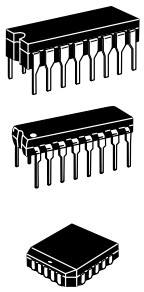

L SUFFIX
CERAMIC PACKAGE
CASE 620–10

P SUFFIX
PLASTIC PACKAGE
CASE 648–08

FN SUFFIX
PLCC
CASE 775–02

MAXIMUM RATINGS

Characteristic	Symbol	Rating	Unit
Power Supply (V_{CC} = 0)	V_{EE}	–8.0 to 0	Vdc
Input Voltage (V_{CC} = 0)	V_I	0 to V_{EE}	Vdc
Output Current — Continuous — Surge	I_{out}	50 100	mA
Operating Temperature Range	T_A	0 to +75	°C
Storage Temperature Range — Plastic — Ceramic	T_{stg}	–55 to +150 –55 to +165	°C °C

ELECTRICAL CHARACTERISTICS (V_{EE} = –5.2 V ±5%) (See Note)

Characteristic	Symbol	0°		25°		75°		Unit
		Min	Max	Min	Max	Min	Max	
Power Supply Current	I_E	—	38	—	35	—	38	mA
Input Current High Pins 6, 11 Pins 7, 9, 10 Pins 4, 5, 12, 13	I_{inH}	 — — —	 468 545 434	 — — —	 275 320 255	 — — —	 275 320 255	µA
Input Current Low	I_{inL}	0.5	—	0.5	—	0.3	—	µA
High Output Voltage	V_{OH}	–1.02	–0.84	–0.98	–0.81	–0.92	–0.735	Vdc
Low Output Voltage	V_{OL}	–1.95	–1.63	–1.95	–1.63	–1.95	–1.60	Vdc
High Input Voltage	V_{IH}	–1.17	–0.84	–1.13	–0.81	–1.07	–0.735	Vdc
Low Input Voltage	V_{IL}	–1.95	–1.48	–1.95	–1.48	–1.95	–1.45	Vdc

AC PARAMETERS

Propagation Delay Data Set, Reset Clock, CE	t_{pd}	 0.4 0.6 0.5	 1.6 1.7 1.6	 0.4 0.7 0.5	 1.7 1.8 1.7	 0.4 0.8 0.6	 1.8 1.9 1.8	ns
Rise Time	t_r	0.5	1.6	0.5	1.7	0.5	1.8	ns
Fall Time	t_f	0.5	1.6	0.5	1.7	0.5	1.8	ns
Set–up Time	t_{set}	2.2	—	2.2	—	2.2	—	ns
Hold Time	t_{hold}	0.7	—	0.7	—	0.7	—	ns

NOTE:
Each MECL 10H series circuit has been designed to meet the dc specifications shown in the test table, after thermal equilibrium has been established. The circuit is in a test socket or mounted on a printed circuit board and transverse air flow greater than 500 linear fpm is maintained. Outputs are terminated through a 50–ohm resistor to –2.0 volts.

LOGIC DIAGRAM

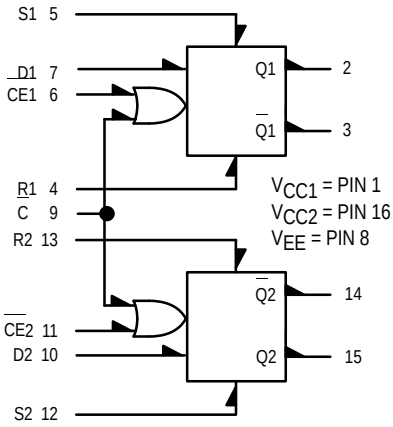

TRUTH TABLE

D	C	CE	Q_{n+1}
L	L	L	L
H	L	L	H
X	L	H	Q_n
X	H	L	Q_n
X	H	H	Q_n

DIP PIN ASSIGNMENT

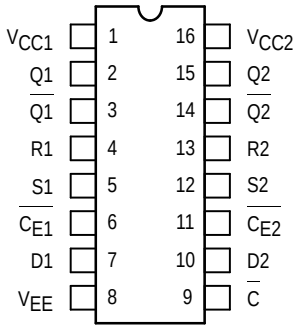

Pin assignment is for Dual–in–Line Package.
For PLCC pin assignment, see the Pin Conversion Tables on page 6–11 of the Motorola MECL Data Book (DL122/D).

© Motorola, Inc. 1996

APPLICATION INFORMATION

The MC10H130 is a clocked dual D type latch. Each latch may be clocked separately by holding the common clock in the low state, and using the clock enable inputs for the clocking function. If the common clock is to be used to clock the latch, the clock enable (CE) inputs must be in the low state. In this mode, the enable inputs perform the function of controlling the common clock (C).

Any change at the D input will be reflected at the output while the clock is low. The outputs are latched on the positive transition of the clock. While the clock is in the high state, a change in the information present at the data inputs will not affect the output information.

The set and reset inputs do not override the clock and D inputs. They are effective only when either C or CE or both are high.

OUTLINE DIMENSIONS

FN SUFFIX
PLASTIC PLCC PACKAGE
CASE 775–02
ISSUE C

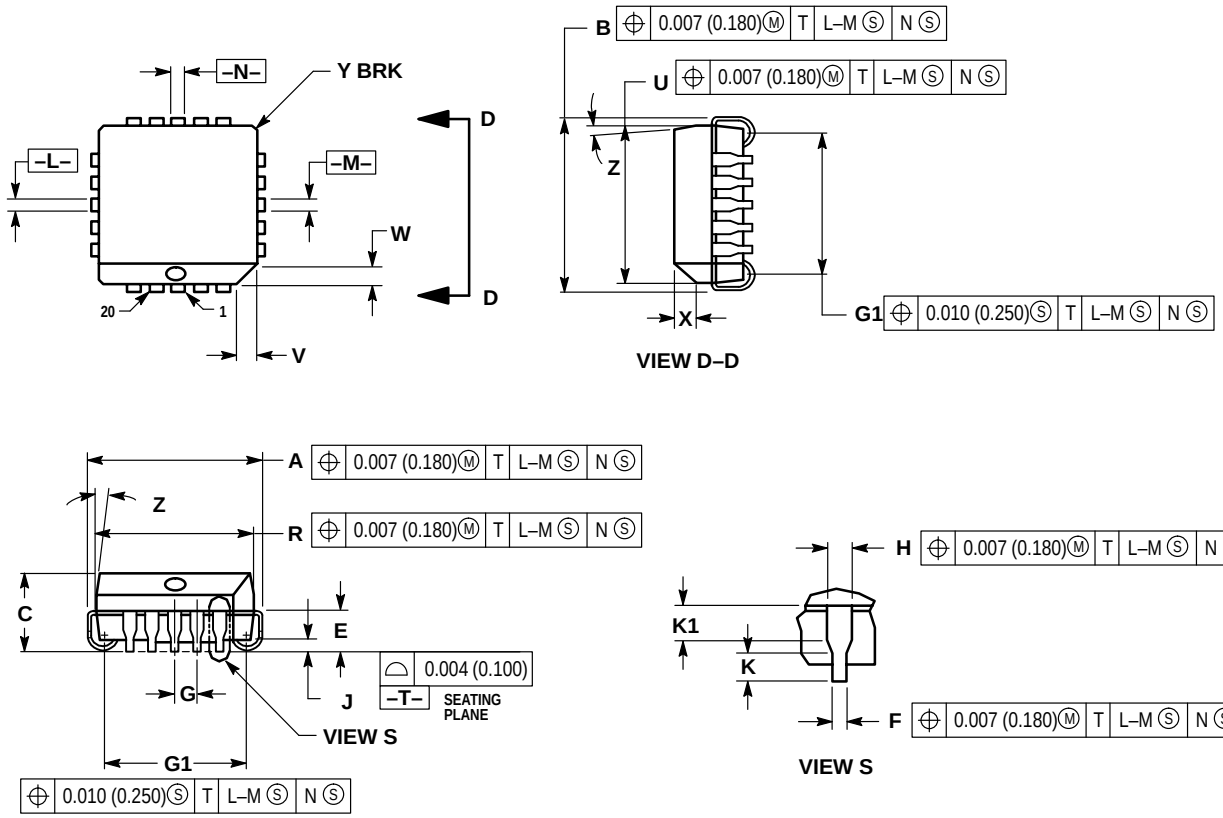

NOTES:
1. DATUMS –L–, –M–, AND –N– DETERMINED WHERE TOP OF LEAD SHOULDER EXITS PLASTIC BODY AT MOLD PARTING LINE.
2. DIMENSION G1, TRUE POSITION TO BE MEASURED AT DATUM –T–, SEATING PLANE.
3. DIMENSIONS R AND U DO NOT INCLUDE MOLD FLASH. ALLOWABLE MOLD FLASH IS 0.010 (0.250) PER SIDE.
4. DIMENSIONING AND TOLERANCING PER ANSI Y14.5M, 1982.
5. CONTROLLING DIMENSION: INCH.
6. THE PACKAGE TOP MAY BE SMALLER THAN THE PACKAGE BOTTOM BY UP TO 0.012 (0.300). DIMENSIONS R AND U ARE DETERMINED AT THE OUTERMOST EXTREMES OF THE PLASTIC BODY EXCLUSIVE OF MOLD FLASH, TIE BAR BURRS, GATE BURRS AND INTERLEAD FLASH, BUT INCLUDING ANY MISMATCH BETWEEN THE TOP AND BOTTOM OF THE PLASTIC BODY.
7. DIMENSION H DOES NOT INCLUDE DAMBAR PROTRUSION OR INTRUSION. THE DAMBAR PROTRUSION(S) SHALL NOT CAUSE THE H DIMENSION TO BE GREATER THAN 0.037 (0.940). THE DAMBAR INTRUSION(S) SHALL NOT CAUSE THE H DIMENSION TO BE SMALLER THAN 0.025 (0.635).

	INCHES		MILLIMETERS	
DIM	MIN	MAX	MIN	MAX
A	0.385	0.395	9.78	10.03
B	0.385	0.395	9.78	10.03
C	0.165	0.180	4.20	4.57
E	0.090	0.110	2.29	2.79
F	0.013	0.019	0.33	0.48
G	0.050 BSC		1.27 BSC	
H	0.026	0.032	0.66	0.81
J	0.020	—	0.51	—
K	0.025	—	0.64	—
R	0.350	0.356	8.89	9.04
U	0.350	0.356	8.89	9.04
V	0.042	0.048	1.07	1.21
W	0.042	0.048	1.07	1.21
X	0.042	0.056	1.07	1.42
Y	—	0.020	—	0.50
Z	2°	10°	2°	10°
G1	0.310	0.330	7.88	8.38
K1	0.040	—	1.02	—

OUTLINE DIMENSIONS

L SUFFIX
CERAMIC DIP PACKAGE
CASE 620–10
ISSUE V

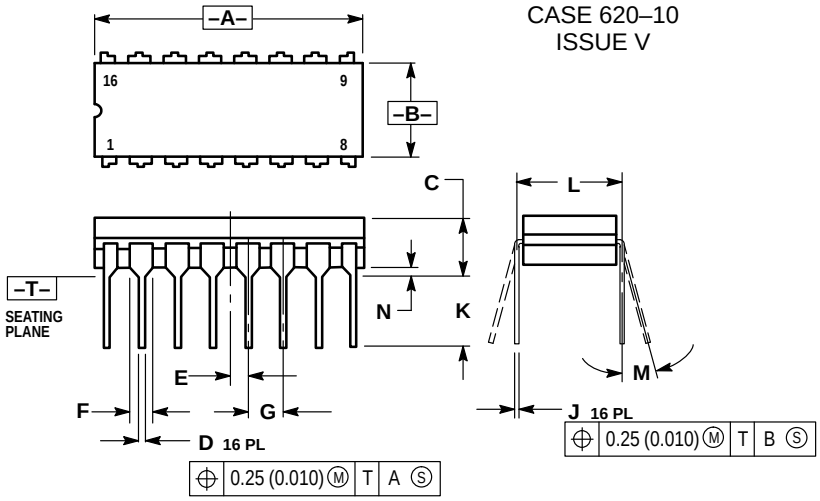

NOTES:
1. DIMENSIONING AND TOLERANCING PER ANSI Y14.5M, 1982.
2. CONTROLLING DIMENSION: INCH.
3. DIMENSION L TO CENTER OF LEAD WHEN FORMED PARALLEL.
4. DIMENSION F MAY NARROW TO 0.76 (0.030) WHERE THE LEAD ENTERS THE CERAMIC BODY.

	INCHES		MILLIMETERS	
DIM	MIN	MAX	MIN	MAX
A	0.750	0.785	19.05	19.93
B	0.240	0.295	6.10	7.49
C	—	0.200	—	5.08
D	0.015	0.020	0.39	0.50
E	0.050 BSC		1.27 BSC	
F	0.055	0.065	1.40	1.65
G	0.100 BSC		2.54 BSC	
H	0.008	0.015	0.21	0.38
K	0.125	0.170	3.18	4.31
L	0.300 BSC		7.62 BSC	
M	0°	15°	0°	15°
N	0.020	0.040	0.51	1.01

P SUFFIX
PLASTIC DIP PACKAGE
CASE 648–08
ISSUE R

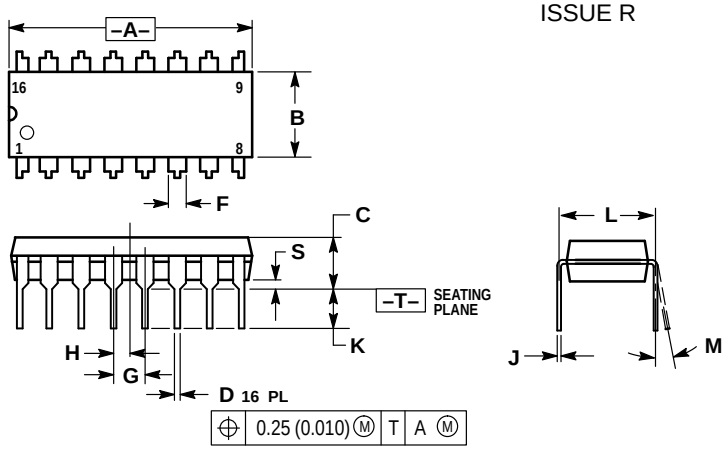

NOTES:
1. DIMENSIONING AND TOLERANCING PER ANSI Y14.5M, 1982.
2. CONTROLLING DIMENSION: INCH.
3. DIMENSION L TO CENTER OF LEADS WHEN FORMED PARALLEL.
4. DIMENSION B DOES NOT INCLUDE MOLD FLASH.
5. ROUNDED CORNERS OPTIONAL.

	INCHES		MILLIMETERS	
DIM	MIN	MAX	MIN	MAX
A	0.740	0.770	18.80	19.55
B	0.250	0.270	6.35	6.85
C	0.145	0.175	3.69	4.44
D	0.015	0.021	0.39	0.53
F	0.040	0.70	1.02	1.77
G	0.100 BSC		2.54 BSC	
H	0.050 BSC		1.27 BSC	
J	0.008	0.015	0.21	0.38
K	0.110	0.130	2.80	3.30
L	0.295	0.305	7.50	7.74
M	0°	10°	0°	10°
S	0.020	0.040	0.51	1.01

Motorola reserves the right to make changes without further notice to any products herein. Motorola makes no warranty, representation or guarantee regarding the suitability of its products for any particular purpose, nor does Motorola assume any liability arising out of the application or use of any product or circuit, and specifically disclaims any and all liability, including without limitation consequential or incidental damages. “Typical” parameters which may be provided in Motorola data sheets and/or specifications can and do vary in different applications and actual performance may vary over time. All operating parameters, including “Typicals” must be validated for each customer application by customer’s technical experts. Motorola does not convey any license under its patent rights nor the rights of others. Motorola products are not designed, intended, or authorized for use as components in systems intended for surgical implant into the body, or other applications intended to support or sustain life, or for any other application in which the failure of the Motorola product could create a situation where personal injury or death may occur. Should Buyer purchase or use Motorola products for any such unintended or unauthorized application, Buyer shall indemnify and hold Motorola and its officers, employees, subsidiaries, affiliates, and distributors harmless against all claims, costs, damages, and expenses, and reasonable attorney fees arising out of, directly or indirectly, any claim of personal injury or death associated with such unintended or unauthorized use, even if such claim alleges that Motorola was negligent regarding the design or manufacture of the part. Motorola and Ⓜ are registered trademarks of Motorola, Inc. Motorola, Inc. is an Equal Opportunity/Affirmative Action Employer.

How to reach us:
USA/EUROPE/Locations Not Listed: Motorola Literature Distribution;
P.O. Box 20912; Phoenix, Arizona 85036. 1–800–441–2447 or 602–303–5454

MFAX: RMFAX0@email.sps.mot.com – TOUCHTONE 602–244–6609
INTERNET: http://Design–NET.com

JAPAN: Nippon Motorola Ltd.; Tatsumi–SPD–JLDC, 6F Seibu–Butsuryu–Center,
3–14–2 Tatsumi Koto–Ku, Tokyo 135, Japan. 03–81–3521–8315

ASIA/PACIFIC: Motorola Semiconductors H.K. Ltd.; 8B Tai Ping Industrial Park,
51 Ting Kok Road, Tai Po, N.T., Hong Kong. 852–26629298