INTEGRATED CIRCUITS

DATA SHEET

P32P4911A
PRML Read Channel with PR4, 8/9 ENDEC, FWR Servo

Product Specification

1996 Jul 25

Philips
Semiconductors

PHILIPS

GENERAL DESCRIPTION

The Philips Semiconductors P32P4911A is a high performance BiCMOS read channel IC that provides all of the functions needed to implement an entire Partial Response Class 4 (PR4) read channel for zoned recording hard disk drive systems with data rates from 42 to 125 Mbit/s or 33 to 100 Mbit/s. Functional blocks include AGC, programmable filter, adaptive transversal filter, Viterbi qualifier, 8,9 GCR ENDEC, data synchronizer, time base generator, and FWR servo.

Programmable functions such as data rate, filter cutoff, filter boost, etc., are controlled by writing to the serial port registers so no external component changes are required to change zones.

The part requires a single +5V power supply. The Philips Semiconductors P32P4911A utilizes an advanced BiCMOS process technology along with advanced circuit design techniques which result in high performance devices with low power consumption.

FEATURES

General:

- Register programmable data rates from 42 to 125 Mbit/s or 33 to 100 Mbit/s
- Sampled data read channel with Viterbi qualification
- Programmable filter for PR4 equalization
- Five tap transversal filter with adaptive PR4 equalization
- 8/9 GCR ENDEC
- Data Scrambler/Descrambler
- Presettable Precoder State
- Programmable write precompensation
- Low operating power (0.925 W typical at 5V)
- Register programmable power management (<5 mW power down mode)
- 4-bit nibble and byte-wide bi-directional NRZ data interfaces
- 8-bit Direct Write mode automatically configured for RCLK = VCO/8
- Serial interface port for access to internal program storage registers
- Single power supply (5V ± 10%)
- Small footprint, 100-lead LQFP package

BLOCK DIAGRAM

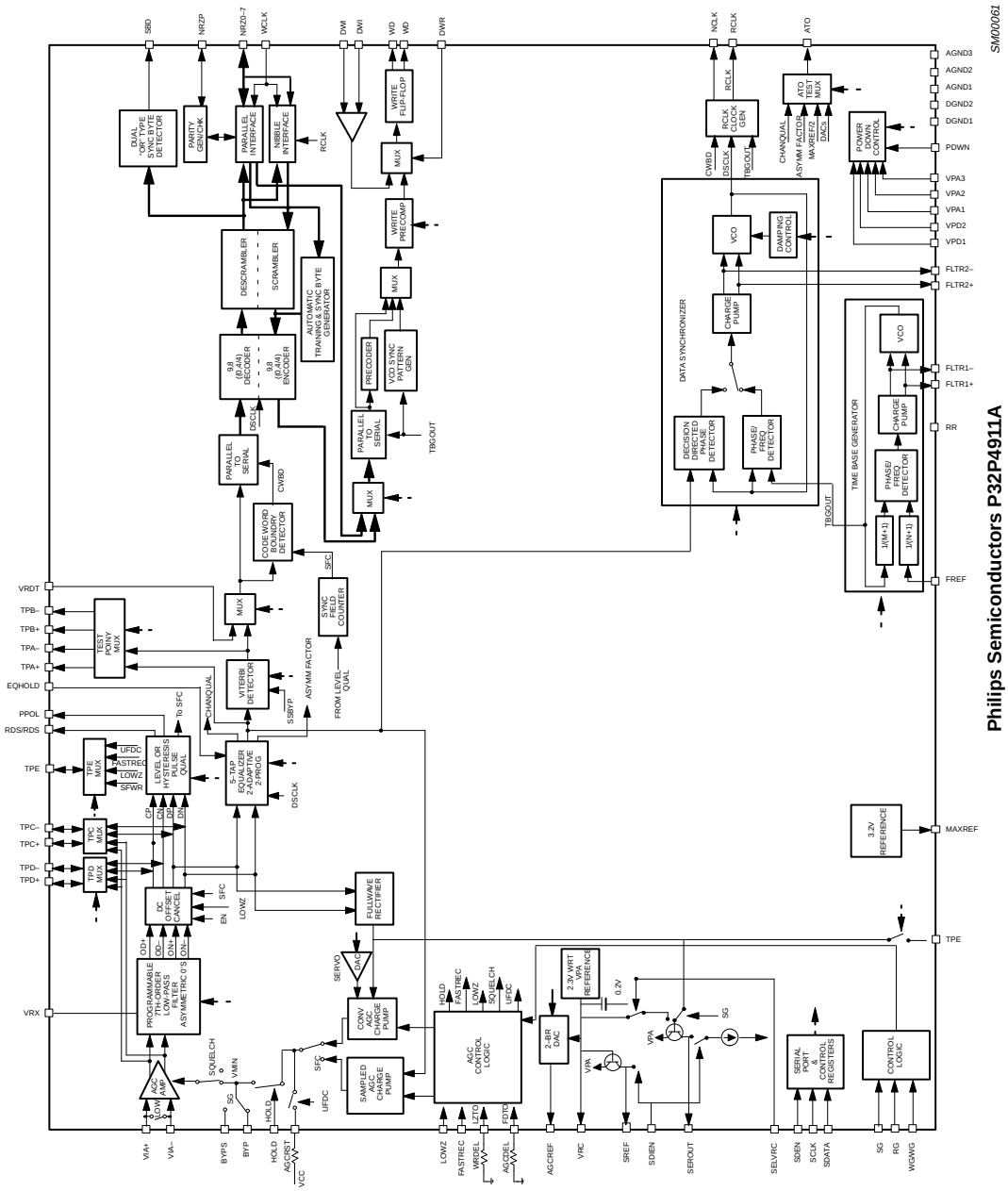

Automatic Gain Control:

- Dual mode AGC, analog during acquisition, sampled during data reads
- Separate AGC level storage pins for data and servo
- Dual rate attack and decay charge pump for rapid AGC recovery (analog)
- Programmable, symmetric, charge pump currents for data reads (sampled)
- Charge pump currents track programmable data rate during data reads (sampled)
- Low drift AGC hold circuitry
- Low-Z circuitry at AGC input provides for rapid external coupling capacitor recovery
- AGC Amplifier squelch during Low-Z
- Wide bandwidth, precision full-wave rectifier
- Programmable AGC controls
  - Separate external input pins for AGC hold, fast recovery, and Low-Z control

or

  - Internal Low-Z and fast decay timing for rapid transient recovery and AGC acquisition. Timing set with external resistors (2). Ultra fast decay current set with external resistor. AGC input impedance vs LOWZ = 5:1.
- 2-bit DAC to control AGC voltage in servo mode between 1.1 and 1.4 V

Filter/Equalizer:

- Programmable, 7-pole, continuous time filter provides:
  - Channel filter and pulse slimming equalization for equalization to PR4
  - Programmable cutoff frequency from 4 to 34 MHz
  - Programmable boost /equalization of 0 to 13 dB
  - Programmable "zeros" equalization provides time asymmetry compensation
  - ±0.5 ns group delay variation from 0.3fc to fc, with fc = 34 MHz
  - Minimizes size and power
  - Low-Z switch at filter output for fast offset recovery
  - No external coupling capacitors required
  - DC offset compensation provided at filter output
  - Five tap transversal filter for fine equalization to PR4
  - Self adapting inner taps (symmetric)
  - Programmable outer taps (symmetric, 4-bits)
  - Equalization hold input
  - "Zeros" channel quality output
  - Amplitude asymmetry factor output

Pulse Qualification:

- Sampled Viterbi qualification of signal equalized to PR4
- Register programmable window or hysteresis pulse qualifier for servo reads
- Selectable RDS pulse width and polarity for servo gray code reads

Time Base Generator:

- Less than 1% frequency resolution
- Up to 141 MHz frequency output
- Independent M and N divide-by registers
- No active external components required

Data Separator:

- Fully integrated data separator includes data synchronizer and 8,9 GCR ENDEC
- Register programmable to 125 Mbit/s operation
- Fast Acquisition, sampled data phase lock loop
- Decision directed clock recovery from data samples
- Adaptive clock recovery thresholds
- Programmable damping ratio for data synchronizer PLL is constant for all data rates
- Data scrambler/descrambler to reduce fixed pattern effects
- 4-bit nibble and byte-wide NRZ data interfaces
- Nibble clock is available during byte-wide mode
- Time base tracking, programmable write precompensation
- Differential PECL write data output
- Integrated sync byte detection, single byte or dual ("or" type)
- Semi-auto training and sync byte generation available for single sync byte operation
- Surface defect scan mode

Servo:

- Wide bandwidth, precision full-wave rectifier
- Separate, automatically selected, registers for servo fc, boost, and threshold
- SEROUT and SREF pins to provide a differential full-wave rectified servo signal
- SELVRC and $\overline{\text{SDIEN}}$ control pins for dc gain and offset calibration
- AGCREF output to provide 2-bit DAC-controlled voltage for applications requiring a fixed gain in servo mode

FUNCTIONAL DESCRIPTION

The Philips Semiconductors P32P4911A implements a complete high performance PR4 read channel, including an AGC, programmable filter/equalizer, adaptive transversal filter, Viterbi pulse qualifier, time base generator, data separator with 8,9 ENDEC and scrambler/descrambler, and FWR servo, that supports data rates from 42 to 125 Mbit/s. Data rates from 33 to 100 Mbit/s are supported by changing a single resistor.

A serial port is provided to write control data to the 17 internal program storage registers.

AGC Circuit Description

The automatic gain control (AGC) circuit is used to maintain a constant signal amplitude at the input of the pulse detector and sampled data processor while the input to the amplifier varies. The circuit consists of an AGC loop that includes an AGC amplifier, charge pump, programmable continuous time filter, and a precision, wide band, full wave rectifier. Depending on whether the read is of servo or data type, the specific blocks utilized in the loop are slightly different. Both loop paths are fully differential to minimize susceptibility to noise. AGC control can be programmably selected between direct and timed modes.

AGC Operation in Servo Read Mode

During servo reads the loop consists of the AGC amplifier with a continuous dual rate charge pump, the programmable continuous time filter, and the full wave rectifier. The gain of the AGC amplifier is controlled by the voltage stored on the BYPS hold capacitor (C_{BYPS}). The dual rate charge pump drives C_{BYPS} with currents that drive the differential voltage at DP/DN (internal nodes) to the value programmed by the 2 SAGCLVL bits in the LDS register. These 2 bits allow adjustment of the filter's normal output voltage from 1.10 to 1.40 Vppd. Attack currents lower the voltage at the BYPS pin which reduces the amplifier gain. Decay currents raise the voltage at the BYPS pin which increases the amplifier gain. The sensitivity of the amplifier gain to changes in the BYPS voltage is approximately 38 dB/V. When the voltage at BYPS is equal to VRC, the gain from the AGC input to DP/DN will be about 24.9 dB. The charge pump is continuously driven by the instantaneous voltage at DP/DN. When the signal at DP/DN is greater than 100% of the programmed AGC level, the normal attack current (I_{CH}) of 416.5 µA is used to reduce the amplifier gain. If the signal is greater than 125% of the programmed level, the fast attack current (I_{CHF}) of 3.5 mA is used to reduce the gain very quickly. This dual rate approach allows the AGC gain to be quickly decreased when it is too high and minimizes distortion when the proper AGC level has been acquired. The 100% and 125% levels are relative to the selected AGC level in servo mode.

A constant normal decay current (I_D) of 24.5 µA acts to increase the amplifier gain when the signal at DP/DN is less than 100% of the programmed AGC level. The large ratio (416.5 µA:24.5 µA) of the normal attack and normal decay currents enables the AGC loop to respond to the peak amplitudes of the incoming read signal rather than the average value. As a result the AGC loop will not be able to quickly increase its gain if required to do so. A fast recovery mode is provided to allow the gain to be rapidly increased to reduce recovery time between mode switches. In the fast recovery mode, the decay current is increased by a factor of 8 to 196 µA (I_{DFR}) and the attack current is increased by a factor of 4.18 to 1.74 mA (I_{CHFR}). This has the effect of speeding up the AGC loop between 4 and 8 times.

It is recommended that the fast recovery mode be asserted when the AGC fields from a sector are being read. Typically, this will be just after each transition of SG (Servo Gate), after powerup, and after WG/$\overline{WG}$ is de-asserted. For example, if C_{BYPS} is 500 pF and FASTREC is asserted for 0.5 µs in servo mode, the voltage at BYPS can increase at most by 0.5 µs * 196 µA/500 pF = 196 mV, which will allow the gain to increase by 6 dB in that time. If FASTREC is asserted for 0.5 µs in non-servo mode and C_{BYP} is 1000 pF, then the voltage at BYP can increase at most by 0.5 µs * 196 µA/ 1000 pF = 98 mV, which will allow the gain to increase by 3 dB in that time. It is recommended that LOWZ be asserted for 0.5 µs just prior to any assertion of FASTREC in order to null any internal DC offsets. However, it is possible to assert both LOWZ and FASTREC simultaneously to reduce sector overhead. This method should be evaluated under the actual system operating conditions.

The programmable AGC level in servo mode is provided to allow the servo demodulator dynamic range to be adjusted over a narrow range.

AGC OPERATION IN DATA READ MODE

For data reads, the loop described above is used until the data synchronizer is locked to the incoming VCO preamble, except that the BYP hold capacitor (C_{BYP}) is used instead of BYPS and (C_{BYPS}). The normal decay current is 24.5 µA, the normal attack current is 416.5 µA, and the fast attack current is 3.5 mA. The fast recovery mode decay current is 196 µA and the fast recovery mode attack current is 1.74 mA. The above mentioned attack and decay currents are not scaled with the data rate setting. After the data synchronizer PLL is locked (SFC), the AGC loop is switched to include the AGC amplifier with a sampled charge pump, the programmable continuous time filter, full wave rectifier, and the sampling 5-tap equalizer to more accurately control the signal amplitude into the Viterbi qualifier. In this sampled AGC mode, a symmetrical attack and decay charge pump is used. The "1" sample amplitudes are sampled and held and compared to the ideal "1" value of 500 mV to generate the error current. The maximum charge pump current value can be programmed from the Sample Loop Control Register to 0, 34, 68, or 102 µA for maximum data rate and will scale downward with reduced Data Rate Register values.

AGC Control Modes

The AGC control mode is determined by the state of bit 6 (AGCSEL) of the Control Operating Register #1. If this bit is 0, then the direct, external AGC control method is selected, i.e., AGC uses external signals provided to the FASTREC, LOWZ, and $\overline{HOLD}$ input pins. If bit 6 is a 1, the timed AGC control method is selected for generating the internal hold, fast recovery, squelch, and Low-Z signals.

DIRECT AGC CONTROL MODE

For maximum application flexibility, all AGC mode control inputs are to be externally provided. When the LOWZ input is High, Low-Z mode is activated. In the Low-Z mode, the AGC amplifier input resistance is reduced to allow quick recovery of the AGC amplifier input AC coupling capacitors. The ratio of Low-Z to Non Low-Z resistance can be selected as either 15:1 or 5:1 by programming the LZTC bit in the Data Boost Register. During Low-Z mode, the time constant of the internal AC coupling networks at the filter outputs are also reduced by the ratio determined by the LZTC bit. This time constant is 300 ns in Low-Z and either 5 µs or 1.5 µs when not in Low-Z mode, depending on the state of the LZTC bit. Low-Z also forces the AGC amplifier gain to be reduced to near 0 V/V. This mode should be activated during and for a short time after a write operation. It should also be activated for a short time after each transition of the SG input and on initial power up.

When the $\overline{HOLD}$ input is Low, the charge pumps are disabled. This de-activates the AGC loop. The AGC amplifier gain will be held constant at a level set by the voltage at the BYP or BYPS pins. The value of the capacitor placed at these pins should be selected to give adequate droop performance when in hold mode as well as to insure stability of the AGC loop when it is active.

The signal provided to the FASTREC input pin determines if the AGC is in fast recovery mode. During the fast recovery (FASTREC=1), the attack and decay currents are increased to allow faster recovery to the proper AGC level. If faster recovery than is provided by FASTREC alone is desired, an ultra fast recovery can be effected by connecting a resistor between the AGCRST pin and the positive supply VPA. If this resistor is present, whenever FASTREC is entered, the voltage on the BYP or BYPS capacitor will be pulled up. This causes an extremely rapid increase in the AGC amplifier gain. The ultra fast current will be disabled the first time that the signal at DP/DN reaches the 125% point. The FASTREC attack and decay currents are used as long as the FASTREC pin is held High.

TIMED AGC CONTROL MODE

This timed AGC control mode differs from the direct control mode in that the external control inputs LOWZ, FASTREC, and $\overline{HOLD}$, are typically not used, and therefore, must be deasserted. The equivalent signals are generated internal to the P32P4911A. These internal signals are generated by one-shots that are triggered by various conditions of the WG/$\overline{WG}$, SG, and $\overline{PDWN}$ inputs. The one-shot timings for the Low-Z and fastrec signals are set by the resistors connected to the WRDEL and AGCDEL input pins, respectively and analog ground. The time Low-Z period = 0.1 µs * (R_{WRDEL} + 0.5) kΩ and the fast recovery period = 0.1 µs * (R_{AGCDEL} + 0.5) kΩ. The current for the ultra fast decay mode is set by the resistor connected between the AGCRST input pin and VPA. In the timed mode, the AGC shall use the C_{BYP} and C_{BYPS} for non-servo and servo modes respectively. The nominal and fast attack and decay currents are the

same in both of the P32P4911A's AGC control modes. In internally timed mode, the LOWZ, FASTREC, and $\overline{HOLD}$ input pins are logically OR'ed with their respective internal control signals but do not affect the internal sequencing of the one-shot generated AGC control signals.

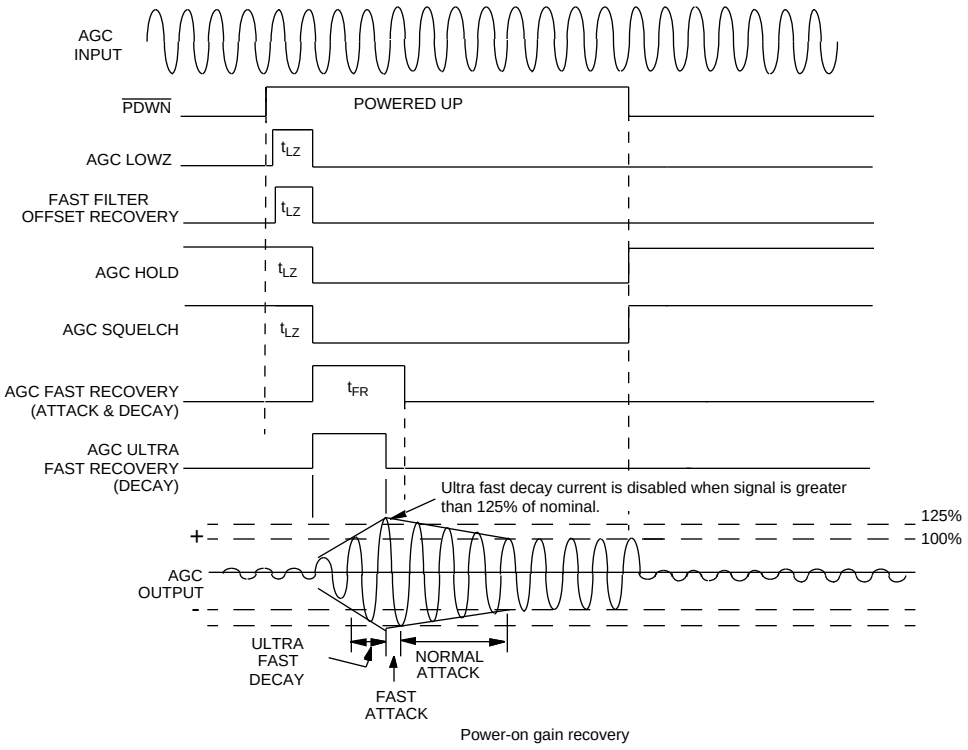

Figure 1: AGC Timing (Internal) Diagrams - Power-On Mode

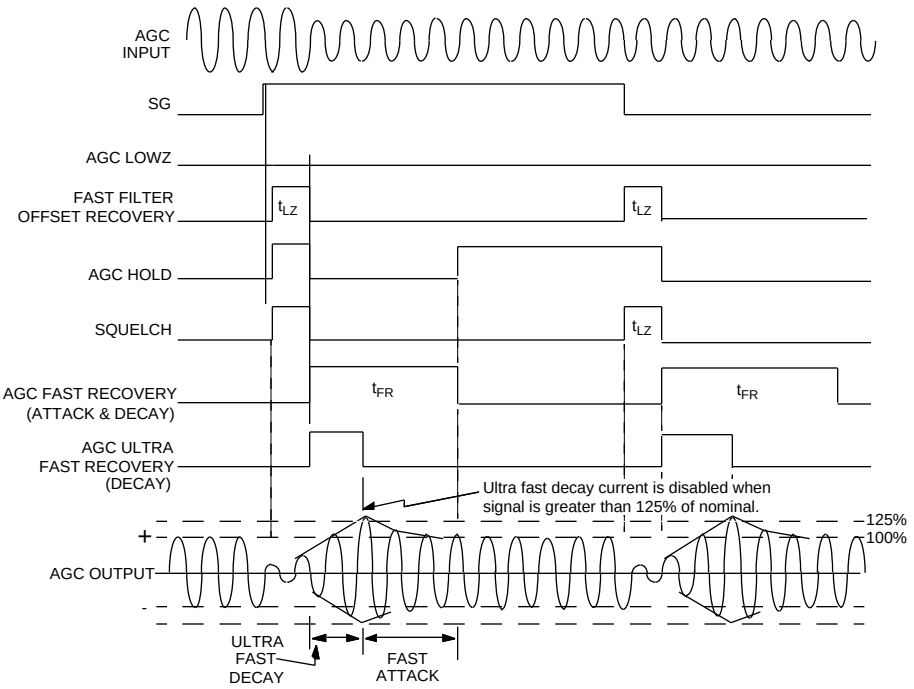

Servo mode gain recovery

Figure 2: AGC Timing Diagrams - Servo Mode

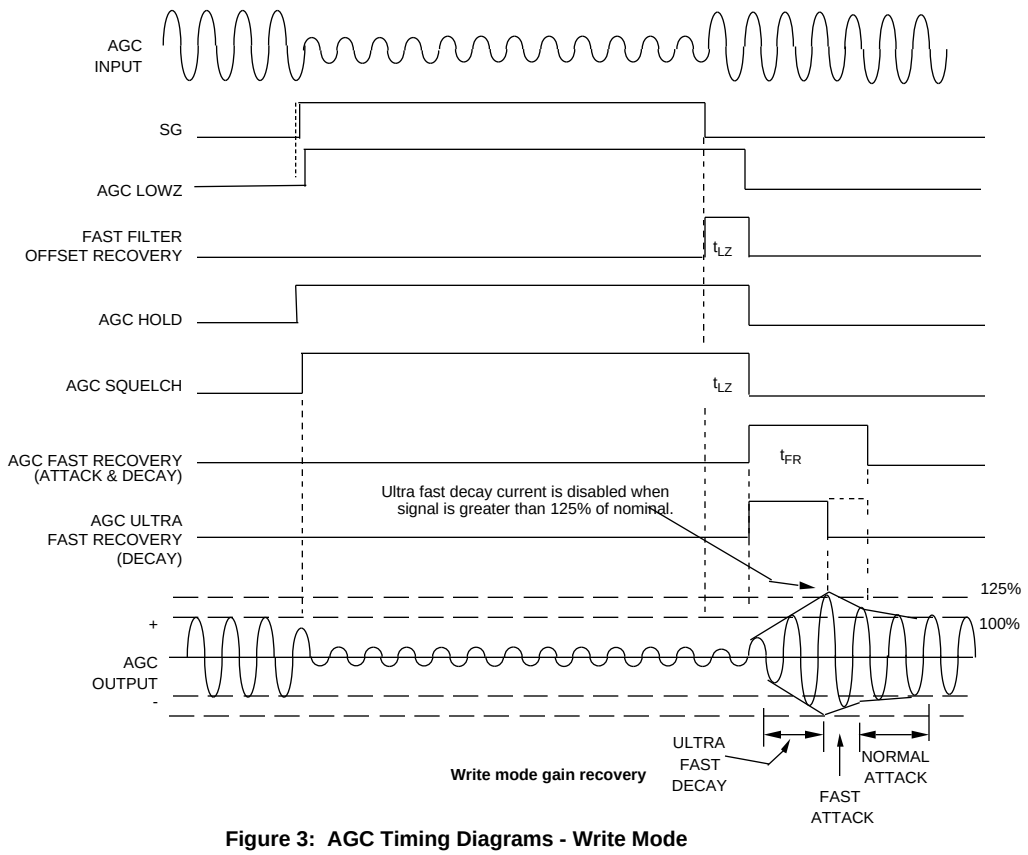

Figure 3: AGC Timing Diagrams - Write Mode

Pulse Qualification Circuit Descriptions

This device utilizes three different types of pulse qualification, one exclusively for servo reads, one primarily for servo reads, and the other for data reads.

Servo Read Mode

For servo gray code reads, either a dual level (window type) qualifier or a hysteresis type level qualifier may be selected. If the PDM bit in the Servo Filter Cutoff Register is set to 0, then the window qualifier is selected, and if the PDM bit is a 1, the hysteresis qualifier is selected. The polarity of the RDS/$\overline{\text{RDS}}$ is selected by the SMS bit (Servo Mode Select) in the Data Rate Register. If SMS=0 then RDS is active-Low and if SMS=1 then RDS is active-High.

Dual Level (Window) Qualifier

During servo reads (SG High) a dual level type of pulse qualifier is used. The level qualification thresholds are set by a 6-bit DAC which is controlled by the Servo Level Threshold Register (LDS). The register value is relative to the peak voltage at the output of the continuous time filter, derived off of the same reference voltage internal to the chip. The positive and negative thresholds are equal in magnitude. The state of the adaptive threshold level enable (ALE) bit in the WP/LT Register does not affect this DAC's reference. The RDS/$\overline{\text{RDS}}$ and the PPOL outputs of the level qualifier indicate a qualified servo pulse and the polarity of the pulse, respectively. The RDS/$\overline{\text{RDS}}$ and PPOL outputs are only active when the SG input is High.

Hysteresis Qualifier

The hysteresis qualifier performs the same as the window qualifier except that the hysteresis qualifier guarantees that the second of two consecutive pulses of the same polarity will not be qualified. The hysteresis qualifier will only qualify pulses of alternating polarity.

Data Read Mode

In data read mode (RG High), the dual level qualifier used for servo reads, is used during VCO sync field counting. Its qualification thresholds are set by a 6-bit DAC which is controlled by the Data Level Threshold Register (LD). The register value is relative to the peak voltage at output of the continuous time filter and the DAC both referenced to band gap voltage. The positive and negative thresholds are equal in magnitude. The state of the adaptive threshold level enable (ALE) bit in the WP/LT Register does not affect the DAC's reference until the sync field count has been achieved. The RDS/$\overline{\text{RDS}}$ and the PPOL outputs of the level qualifier are not active in data read mode.

Viterbi Qualifier

The second type of pulse qualification, the Viterbi qualifier, is only used during data read mode after the sync field count has been achieved. The Viterbi qualifier has two significant blocks, one that feeds the other. The first block is the sampled pulse detector and the second is the survival sequence register.

The sampled pulse detector performs the pulse acquisition/detection in the sampled domain. It acquires pulses by comparing the code clock sampled analog waveform to the positive and negative thresholds established by the programmable Viterbi threshold window. The threshold window is defined to be the difference between the positive and negative threshold levels. The threshold window, Vth, is set by a 7-bit DAC which is controlled by the Viterbi Detector Threshold Register (VDT). While the window size is fixed by the programmed Vth value, the actual positive and negative thresholds track the most positive and the most negative samples of the equalized input signal. For example, the Viterbi positive signal threshold, Vpt = Vpeak (+) max if the previous detected level was (+). If the previous detect level was (-), Vpt = Vpeak(-)max + Vth, where Vpeak(-)max is the maximum amplitude of the previously detected negative signal. Normally Vth is set to equal Vpeak (approx. 500 mV).

After the pulses have been detected they must be further qualified by the survival sequence registers and associated logic. This logic guarantees that for sequential pulses of the same polarity within the maximum run length, only the latest is qualified. In this way, only the pulse of greatest amplitude will be qualified.

The Viterbi qualifier is implemented as two parallel qualifiers that operate on interleaved samples. Each qualifier has a survival sequence register length of 5.

To facilitate media scan testing, the Viterbi survival sequence register may be bypassed by setting the BYPSR bit in the Viterbi Detector Threshold (VDT) register.

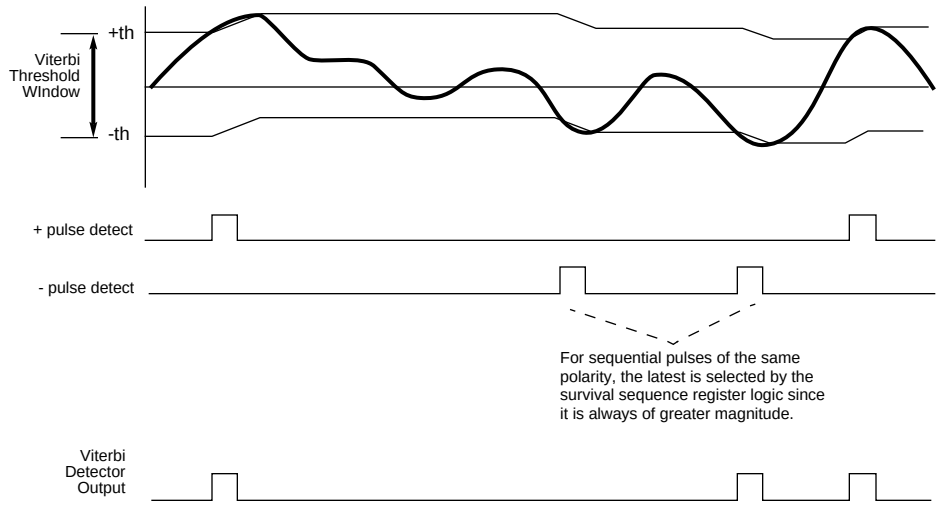

Figure 4: Viterbi Detection

Programmable Filter Circuit Description

The on-chip, continuous time, low pass filter has register programmable cutoff and boost settings, and provides both normal and differentiated outputs. It is a 7th order filter that provides a 0.05° phase equiripple response. The group delay is relatively constant up to twice the cutoff frequency. For pulse slimming two zero programmable boost equalization is provided with no degradation to the group delay performance. The differentiated output is created by a single-pole, single-zero differentiator. Both the boost and the filter cutoff frequency for data reads and the filter cutoff frequency for servo reads are programmed through internal 7-bit DACs, which are accessed via the serial port logic. The nominal boost range at the cutoff frequency is 0 to 13 dB for data reads and is controlled by the Data Boost Register. In servo mode, the boost can be programmed in 2 dB steps from 0 to 6 dB by programming the two FBS bits (bits 6 and 7) in the Filter Boost Servo register. The cutoff frequency, fc is variable from 4 to 34 MHz and controlled by the Data Cutoff Register or Servo Cutoff Register in the servo mode. The cutoff and boost values for servo reads are automatically switched when servo mode is entered.

The filter zero locations can be programmed asymmetrically about zero to compensate for MR head time asymmetry. The asymmetry is adjusted by programming the 6 FGD bits (bits 0-5) in the Filter Boost Servo register. The asymmetric zeros are not usable while in servo mode.

The normal low pass filter is of a seven-pole two-real-zero type. Figure 5 illustrates the transfer function normalized to 1 rad/s. The response can be denormalized to the cutoff frequency of fc (Hz) by replacing s by s/2πfc, while the boost and group delay equalization are controlled by varying the α and β.

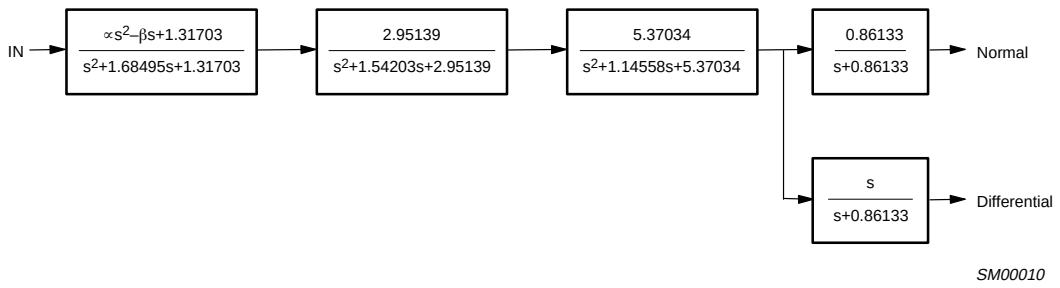

Figure 5: Programmable Filter Normalized Transfer Function

With a zero at the origin, the filter provides a time-differentiated filter output. This is used in time qualification of the peak detection. To ease the timing requirement in peak detection of a signal slightly above the qualification threshold, the time-differentiated output is purposely delayed by 1.2 ns relative to the normal low pass output.

The normal low pass output feeds the data qualifier (DP/DN), and the differentiated output feeds the clock comparator (CP/CN).

Five definitions are introduced for the programmable filter control discussion (Figure 6):

Cutoff Frequency: The cutoff frequency is the -3 dB low pass bandwidth with no boost and group delay equalization, i.e. $\alpha=0$ and $\beta=0$.

Actual Boost: The amount of peaking in magnitude response at the cutoff frequency due to $\alpha\neq0$ and/or $\beta\neq0$.

Alpha Boost: The amount of peaking in magnitude response at the cutoff frequency due to $\alpha\neq0$ and without group delay equalization. In general, the actual boost with group delay equalization is higher than the alpha boost. However, with >3 dB alpha boost, the difference is minimal. $\alpha=1.31703 \times (10^{BOOST(dB)/20}-1)$

Group Delay Δ%: The group delay Δ% is the percentage change in absolute group delay at DC with respect to that without equalization applied ($\beta=0$). $\beta=0.04183$ * GD%.

Group Delay Variation: The group delay variation is the change in group delay from DC to the cutoff frequency. This can be expressed as a percentage defined as: (change in group delay ÷ absolute group delay with $\beta=0$) * 100%. An alternative is to express the group delay variation in nanoseconds. Because the absolute group delay variation in nanoseconds is scaled by the programmed cutoff frequency, the percentage expression is used in this specification.

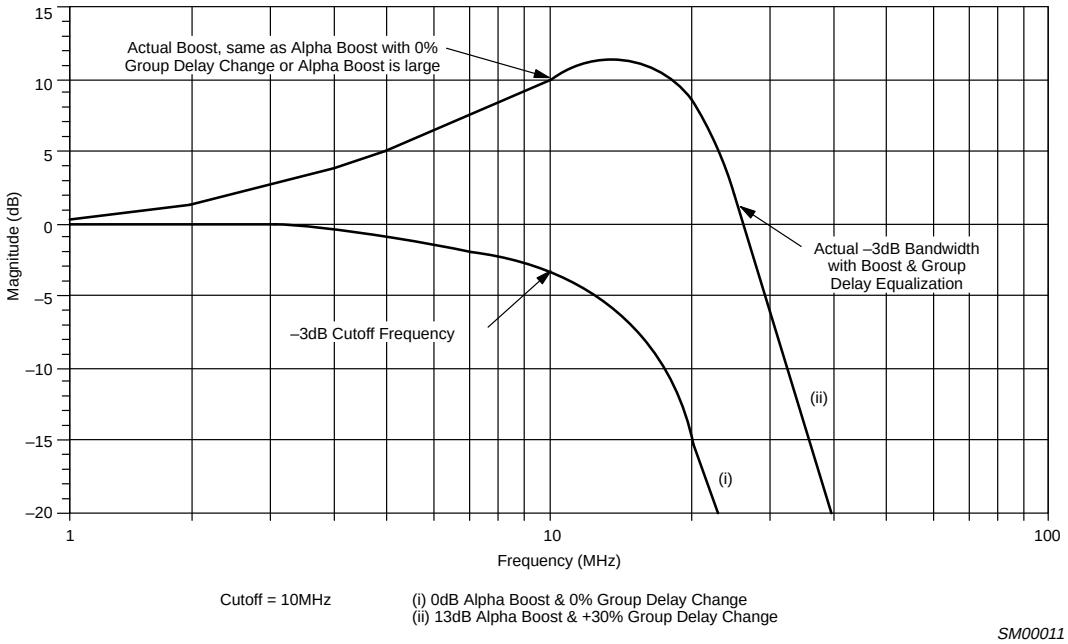

Figure 6: Filter Magnitude Response

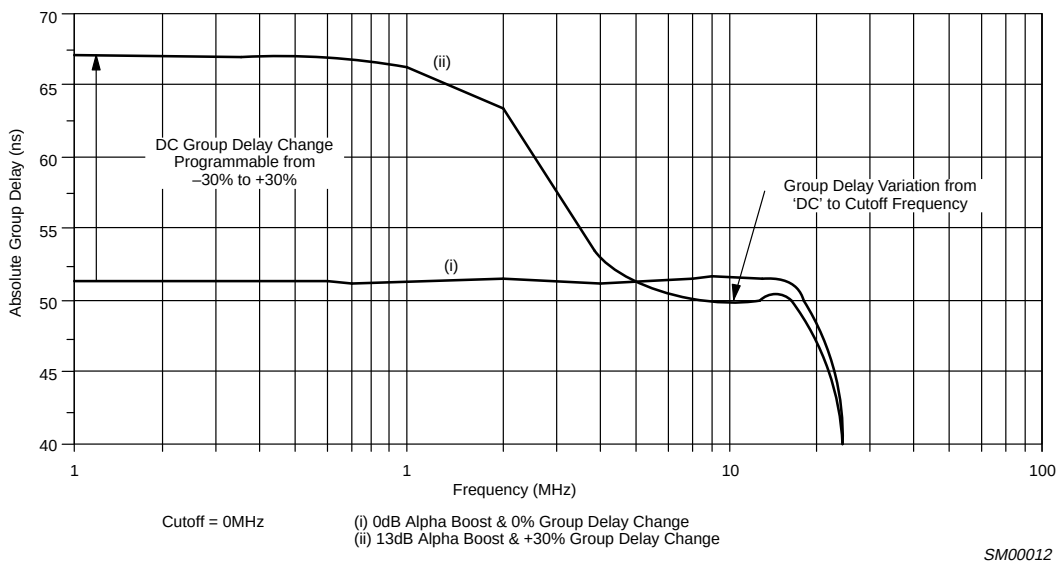

Figure 7: Filter Group Delay Response

FILTER OPERATION

Direct coupled differential signals from the AGC amplifier output are applied to the filter. The programmable bandwidth and equalization characteristics of the filter are controlled by 3 internal DACs. The registers for these DACs (FC, FB, and FGD) are programmed through the serial port. The current reference for the DACs is set using a single external resistor connected from pin VRX to ground. The voltage at pin VRX is proportional to absolute temperature (PTAT), hence the current for the DACs is a PTAT reference current. This establishes the excellent temperature stability for the filter characteristics.

The cutoff frequency can be set independently in the servo mode and the data mode. In the data mode, the cutoff frequency is controlled by the Data Cutoff Register. In the servo mode, the cutoff frequency is controlled by the Servo Cutoff Register.

CUTOFF CONTROL

The programmable cutoff frequency from 4 to 34 MHz is set by the 7-bit linear FC DAC. The FC register holds the 7-bit DAC control value. The cutoff frequency is set as:

f_c (MHz) = 0.301 * FC - 1.142 $\quad 44 \leq FC \leq 117$

for servo zones

f_c (MHz) = 0.277 * FCS + 0.08 $\quad 14 \leq FCS \leq 43$

The filter cutoff (f_c) is defined as the -3 dB bandwidth with no boost applied. When boost/equalization is applied, the actual -3 dB point will move out. The ratio of the actual -3 dB bandwidth to the programmed cutoff is tabulated in Table 1 as a function of applied boost and group delay equalization.

Table 1: Ratio of Actual -3dB Bandwidth to Cutoff Frequency

Alpha Boost	Group Delay %						
	±30%	±25%	±20%	±15%	±10%	±5%	±0%
0 dB	1.62	1.47	1.31	1.16	1.06	1.01	1.00
1	1.74	1.62	1.50	1.38	1.28	1.21	1.19
2	1.87	1.79	1.71	1.63	1.56	1.51	1.49
3	2.01	1.96	1.91	1.87	1.83	1.80	1.79
4	2.14	2.11	2.09	2.07	2.05	2.04	2.03
5	2.25	2.24	2.23	2.22	2.21	2.20	2.20
6	2.35	2.34	2.34	2.33	2.33	2.32	2.32
7	2.44	2.44	2.43	2.43	2.42	2.42	2.42
8	2.52	2.52	2.51	2.51	2.51	2.51	2.51
9	2.59	2.59	2.59	2.59	2.59	2.59	2.59
10	2.67	2.66	2.66	2.66	2.66	2.66	2.66
11	2.73	2.73	2.73	2.73	2.73	2.73	2.73
12	2.80	2.80	2.80	2.80	2.80	2.80	2.80
13	2.87	2.87	2.86	2.86	2.86	2.86	2.86

BOOST CONTROL

The programmable alpha boost from 0 to 13 dB is set by the 7-bit linear FB DAC in data mode or 2-bit linear FBS DAC in servo mode. The FB register holds the 7-bit DAC control value and the FBS register holds the 2-bit control value. The alpha boost in data mode is set as:

Alpha Boost (dB) = 20 log [0.021848 * FB + 0.000046 * FC * FB + 1] $0 \leq FB \leq 127$

The alpha boost in servo mode is set as:

Alpha Boost (dB) = 2 * FBS $0 \leq FBS \leq 3$

That is, the boost in servo mode can be changed in 2 dB steps from 0 to 6 dB.

The programmed alpha boost is the magnitude gain at the cutoff frequency with no group delay equalization. When finite group delay equalization is applied, the actual boost is higher than the programmed alpha boost. However, the difference becomes negligible when the programmed alpha boost is >3 dB. Table 2 tabulates the actual boost as a function of the applied alpha boost and group delay equalization.

Table 2: Ratio of Actual -3dB Bandwidth to Cutoff Frequency

Alpha Boost	Group Delays Δ%						
	±30%	±25%	±20%	±15%	±10%	±5%	±0%
0 dB	2.81	2.12	1.47	.89	0.42	0.11	0.00
1	3.36	2.76	2.21	1.72	1.33	1.09	1.00
2	3.97	3.45	2.99	2.58	2.27	2.07	2.00
3	4.63	4.19	3.80	3.47	3.21	3.05	3.00
4	5.34	4.97	4.65	4.38	4.17	4.04	4.00
5	6.10	5.79	5.52	5.30	5.14	5.03	5.00
6	6.89	6.64	6.42	6.24	6.11	6.03	6.00
7	7.72	7.51	7.34	7.19	7.09	7.02	7.00
8	8.58	8.41	8.27	8.15	8.07	8.02	8.00
9	9.47	9.33	9.22	9.12	9.05	9.01	9.00
10	10.4	10.3	10.2	10.1	10.1	10.0	10.0
11	11.3	11.2	11.1	11.1	11.0	11.0	11.0
12	12.2	12.2	12.1	12.1	12.0	12.0	12.0
13	13.2	13.1	13.1	13.1	13.0	13.0	13.0

GROUP DELAY EQUALIZATION

The group delay Δ% can be programmed between -30% to +30% by the 6-bit linear FGD DAC. The FGD register holds the 6-bit DAC control value. The group delay Δ% is set as:

Group Delay Δ% = 0.9783 * (FGD4:0) - 0.665 $0 \leq$ FGD4:0 ≤ 31 and FGD5 = sign bit

The group delay Δ% is defined to be the percentage change of the absolute group delay due to equalization from the absolute group delay without equalization at DC.

The current reference for the filter DACs is set using a single 12.1 kΩ resistor, from the VRX pin to ground. The voltage at VRX is proportional-to-absolute-temperature (PTAT).

The outputs of the filter are internally AC coupled to the qualifier inputs and buffers for the filter monitoring test points TPC+/TPC- and TPD+/TPD-.

Internal AC Coupling

The conventional external ac coupling at the filter to qualifier interface has been replaced by a pair of feedback circuits, one for the normal and one for the differentiated outputs of the filter. The offset of the filter outputs are sensed, integrated, and fed back to the filter output stage. The feedback loop forces the filter offset nominally to zero. In the normal read mode, (LOWZ=0), the integration time constant is set to 5 µs until the sync field counter reaches the programmed SFC count. At the SFC count, the offset sensing is switched into sampled mode and the time constant is reduces to 300 ns. In sampled mode the offset correction voltage is generated from the zeros qualified by the quantizer. This ensures that the sampled voltage level, not DP/DN, will be offset free.

Amplitude Asymmetry Detection and Correction

In the presence of amplitude asymmetry, such as that generated by MR heads, the sampled data processor (SDP) will be presented with zeros generated in one of two ways. The first is due the lack of a magnetic transition and will be referred to as a "real" zero. The second is produced by the superposition of adjacent +1 and -1 magnetic transitions and results in zero samples that shall be referred to as "cancelled" zeros. In the presence of amplitude asymmetry from an MR head, the "real" zeros are zero, but the "cancelled" zeros are offset by the difference between the +1 and -1 samples.

The offset correction circuit forces the ground reference of the sampled data processor to the center of the "real" and "cancelled" zero sample levels.

The integration time constant is increased by a factor of 4 to 1.0 µs, after the sync byte has been detected.

AMPLITUDE ASYMMETRY MONITOR POINT

An amplitude asymmetry quality factor "Qasym" may be selected to be output on the ATO output pin by programming the ASEL bits in the Power Down Register. This signal is derived by computing the average distance of the "real" and "canceled" zeros from the sampled data processor's system ground which was established between the two zeros levels by the offset correction circuit. The average distance is a measure of the asymmetry present in the MR read back signal. A gain of 4 from the sampled values is utilized and is low pass filtered with a time constant that is programmable to one of four different values by programming the two QTC bits in the Control Operating Mode Register #2.

The signal is then buffered and differentially multiplexed to the ATO pin. The signal is referenced to MAXREF/2.

The asymmetry quality factor can be held at the value present at sync byte detect by setting the FREZQ bit in the WP/LT Register. The value will be held for 10 ms and is NOT reset. The ATO output may also be externally filtered to provide time constants that are appropriate for averaging over major portions of, or an entire sector. The capacitors on externally added filters must be externally reset. Note that any external filtering added to ATO output pin will affect both the amplitude asymmetry monitor signal and the equalization quality monitor signal since they are both muxed to the ATO output pin.

Adaptive Equalizer Circuit Description

Up to 7 dB of equalization for fine shaping of the incoming read signal to the PR4 waveshape is provided by a 5 tap, sampled analog, transversal filter. This filter provides a self adaptive multiplier coefficient for the inner taps and a programmable coefficient for the outer taps. Both inner taps use the same coefficient (km_1), and both outer taps use the same coefficient (km_2).

For the adaptive inner taps, the value of km_1 is adjusted to force "zero" samples to zero volts. A special equalizer training pattern, located after the VCO sync field in the sector format, is used to provide an optimum signal for the equalizer to adapt to. The adaptive property of these taps is enabled or disabled by the AEE bit in the Sample Loop Register. If the adaptive property is enabled, whether adaptation occurs only during the training pattern or both during the training pattern and the user data is controlled by the AED bit in the Sample Loop Register.

The adaptation can be observed when the equalizer control voltage is selected as the TPA+/TPA- output. The equalizer control voltage is approximately related to km1 by:

km1 = 0.009 * Date Rate (Mbit/s) * (TPA+ - TPA-)

The multiplier coefficients for the adaptive taps can be held for up to 10 ms if the EQHOLD input is brought High after sync byte detect has occurred during a previous read in which proper training has occurred. The EQHOLD input pin may be asserted at any time during a read cycle and the adaptive coefficient Km1 present at that time will be held, provided no leakage occurs, until the EQHOLD input is de-asserted.

The multiplier coefficient, km_2, for the outer taps is programmable between +0.117 and -0.135 by the 4 km bits (bits 4-7) in the Control Operating Mode Register #2.

EQUALIZATION QUALITY MONITOR POINT

An equalization quality factor "Q" may be selected to be output on the ATO output pin by programming the ATOSEL bits in the Power Down Register and should be used as a guide for selection of the appropriate value for km_2. This signal is derived by computing the absolute distance of the "real" and "canceled" zeros from the sampled data processor's system ground which was established between the two zeros levels by the offset correction circuit. Then the asymmetry factor (QASYM) is subtracted and the resulting signal is full wave rectified and low pass filtered using one of the four time constants that may be programmed with the two QTC bits in the Control Operating Mode Register #2. The signal is then buffered and differentially multiplexed to the ATO pin. The overall gain to the ATO pin is 4. The signal is referenced to MAXREF/2.

The equalization quality factor can be held at the value present at sync byte detect by setting the FREZQ bit in the WP/LT Register. The value will be held for approx. 10 ms and is NOT reset**.** The ATO output may also be externally filtered to provide time constants that are appropriate for averaging over major portions of, or an entire sector. The capacitors on externally added filters must be externally reset.

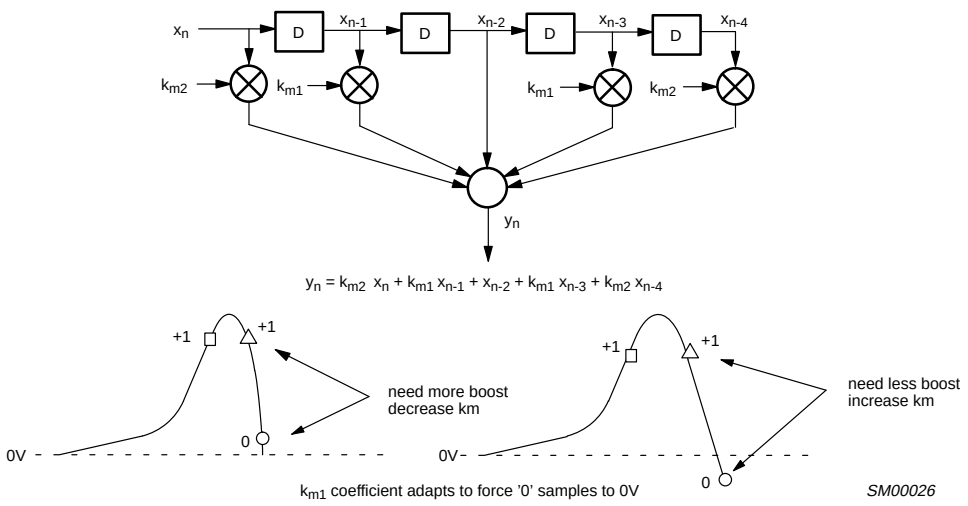

Figure 8: Block Diagram of 5-Tap Equalizer

Time Base Generator Circuit Description

The time base generator (TBG) is a PLL based circuit, that provides a programmable reference frequency to the data separator for constant density recording applications. This time base generator output frequency can be programmed with a less than 1% accuracy via the M, N and DR Registers. The TBG output frequency, Fout, should be programmed as close as possible to ((9/8) * NRZ Data Rate). The time base also supplies the timing reference for write precompensation so that the precompensation tracks the reference time base period.

The time base generator requires an external passive loop filter to control its PLL locking characteristics. This filter is fully-differential and balanced in order to reduce the effects of common mode noise.

In read, write and idle modes, the programmable time base generator is used to provide a stable reference frequency for the data separator. In the write and idle modes, the Time Base Generator output, when selected by the Control Test Mode Register, can be monitored at the TPB+ and TPB- test pins. In the read mode, the TBG output should not be selected for output on the test pins so that the possibility of jitter in the data separator PLL is minimized.

The reference frequency is programmed using the M and N registers of the time base generator via the serial port, and is related to the external reference clock input, FREF, as follows:

F_{TBG} = FREF * [(M + 1) ÷ (N + 1)]

The M and N values should be chosen with the consideration of phase detector update rate and the external passive loop filter design. The Data Rate Register must be set to the correct VCO center frequency. The time base generator PLL responds to any changes to the M and N registers, only after the DR register is updated.

The DR register value, directly affects the following:

center frequency of the time base generator VCO,

center frequency of the data separator VCO,

phase detector gain of the time base generator phase detector,

phase detector gain of the data separator phase detector,

write precompensation

The reference current for the DR DAC is set by an external resistor, RR, connected between the RR pin and ground.

RR = 10.0 kΩ for 42 to 125 Mbit/s data rate range
RR = 12.1 kΩ for 33 to 100 Mbit/s data rate range

Data Separator Circuit Description

The Data Separator circuit provides complete encoding, decoding, and synchronization for 8,9 (0,4,4) GCR data. In data read mode, the circuit performs clock recovery, code word synchronization, decoding, sync byte detection, descrambling, and NRZ interface conversion. In the write mode, the circuit generates the VCO sync field, scrambles and converts the NRZ data into 8,9 (0,4,4) GCR format, precodes the data, and performs write precompensation.

The circuit consists of five major functional blocks; the data synchronizer, 8,9 ENDEC, NRZ scrambler/descrambler, NRZ interface, and write precompensation.

DATA SYNCHRONIZER

The data synchronizer uses a fully integrated, fast acquisition, PLL to recover the code rate clock from the incoming read data. To achieve fast acquisition, the data synchronizer PLL uses two separate phase detectors to drive the loop. A decision-directed phase detector is used in the read mode and phase-frequency detector is used in the idle, servo, and write modes.

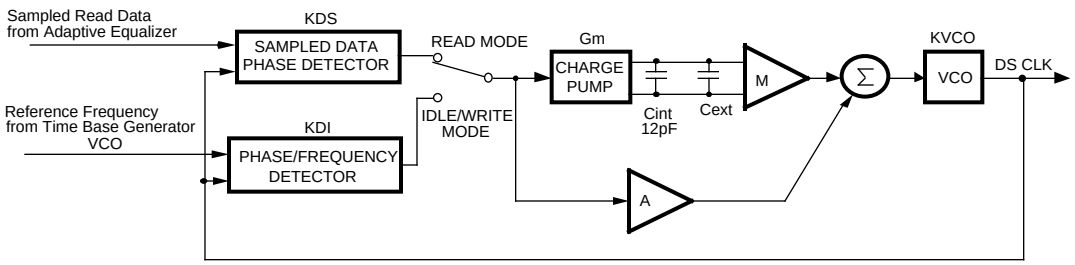

Figure 9: Data Synchronizer Phase Locked Loop

In the read mode the decision-directed timing recovery updates the PLL by comparing amplitudes of adjacent "one" samples or comparing the "zero" sample magnitude to ground for the entire sample period. A special (non IBM) algorithm is used to prevent "hang up" during the acquisition phase. The determination of whether a sample is a "one" or a "zero" is performed by a dedicated, dual mode, threshold comparator. This comparator's threshold levels are determined by the value, Lth, programmed in the Data Threshold Register. The fixed level threshold before the sync field count (SFC) has been achieved will be 1.4 times the threshold level after SFC since this is the ratio of the peak signal to the sampled "1" signal amplitude for PR4. The dual mode nature of this comparator allows the selection of either symmetric fixed or independent self adapting (+) and (-) thresholds by programming the adaptive level enable (ALE) bit in the WP/LT Register. Also at SFC, the gain of the phase detector is reduced by a factor of 6 or 10, selectable by the GS bit in the Damping Ratio Control register. This gain shift increases the loop's noise immunity during data tracking by reducing its bandwidth.

The adaptive reference allows the specification of the threshold value to be a percentage of an averaged peak value. When adaptive mode is selected, the fixed thresholds are used until the sync field count (SFC) has been reached, then the adaptive levels are internally enabled. The time constant of a single pole filter that controls the rate of adaptation, is programmable by bits TC2-1 in the WP/LT Register.

In the write and idle modes the non-harmonic phase-frequency detector is continuously enabled, thus maintaining both phase and frequency lock to the time base generator's VCO output signal, F_{TBG}. The polarity and width of the detector's output current pulses correspond to the direction and magnitude of the phase error.

The two phase detectors' outputs are muxed into a single differential charge pump which drives the loop filter directly. The loop filter requires an external capacitor. The loop damping ratio is programmed by bits 6-0 in the Damping Ratio Control Register. The programmed damping ratio is independent of data rate.

In write mode, the TBG output is used to clock the encoder, precoder, and write precompensation circuits. The output of the precompensation circuit is then fed to the write data flip-flop which generates the write data (WD, $\overline{WD}$) outputs.

ENDEC

The ENDEC implements an 8,9 (0,4,4) Group Coded Recording (GCR) algorithm. The code has a minimum of no zeros between ones and a maximum of four zeros between ones for the interleaved samples. During write operations the encoder portion of the ENDEC converts 8-bit parallel, scrambled or nonscrambled, data to 9-bit parallel code words that are then converted to serial format. In data read operation, after the code word boundary has been detected in the Viterbi qualified serial data stream, the data is converted to 9-bit parallel form and the decoder portion of the ENDEC converts the 9-bit code words to 8-bit NRZ format.

Sync Byte Detection

The P32P4911A supports two types of sync byte detection, dual byte and single byte.

Dual Sync Byte Detection

The P32P4911A implements a dual "or" type sync byte detection scheme to reduce the probability that a single bit error will lead to the inability to synchronize. The two sync bytes are different and are spaced apart by one byte. The first sync byte is 1FH and the second is 69H. Sync byte detection is considered to have occurred if either of the two sync bytes is found but the sync byte detect output pin ($\overline{SBD}$) is transitioned at the position in time when the second sync byte (69) would have been detected. The data placed on the NRZ outputs when $\overline{SBD}$ goes Low is always the second sync byte (69) regardless of which of the two was actually detected.

Single Sync Byte Detection

Since the P32P4911A looks for either of the two sync bytes, the absence of the first sync byte is not an error. This allows for only a single byte to be written and still be able to achieve synchronization. It is recommended that only the 69H be written if single sync byte detection is desired so that when detection occurs, the data output on the NRZ pins at sync byte detect will match the sync byte written.

SINGLE SYNC BYTE DETECTION WHEN SEMI AUTOMATIC TRAINING IS ENABLED

When the AUTOTR bit is set in the Control Operating Register, the training/sync byte sequence is generated with an internal state machine. The internal state machine generates the 5-byte equalizer training pattern (93H) followed by the second sync byte (69H); the first sync byte (1FH) is not written by the internal state machine. To initiate the writing of the training pattern and sync byte in this mode, an FFH must be placed on the NRZ bus for 6 byte times prior to the user data. This mode may be desirable if controller state machine space is very limited.

SCRAMBLER/DESCRAMBLER

The scrambler/descrambler circuit is provided to reduce fixed pattern effects on the channel's performance. It is enabled or disabled by bit 2 (SD) of the Control Operating Register. In write mode, if enabled, the circuit scrambles the 8-bit internal NRZ data before passing it to the encoder. Only user data, i.e., the NRZ data following the second sync byte (69H), is scrambled. In data read mode, only the decoded NRZ data after the second sync byte (69H) is descrambled. The scrambler polynomial is $H(X)= 1 \oplus X7 \oplus X10$. The scrambler block diagram is shown in Figure 10. The scrambler contributes no delay in either the encode or decode paths and therefore there is no difference in path delays whether or not the scrambler is enabled.

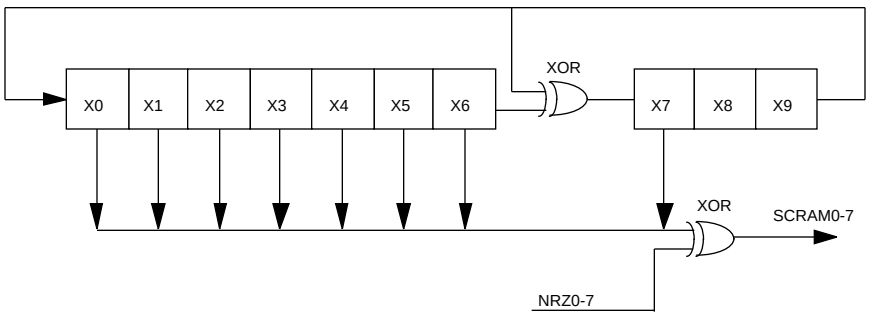

Figure 10: P32P4911A Scrambler Block Diagram

NRZ INTERFACE

The NRZ interface circuit provides the ability to interface with either a nibble or byte-wide controller. The NRZ interface type is specified by the programming of bit 4 (NIB) of the Control Operating Register. If byte-wide mode is selected, the circuit does not reformat the data before passing it to and from the internal 8-bit bus. If nibble mode is selected, the NRZ interface circuit converts the 4 LSBs of the external 8-bit bus to the internal 8-bit bus. Only the selected NRZ interface is enabled and the unused bits can be left floating. Both the byte-wide and nibble interfaces define the most significant bit of the interface as the most significant bit of the data and the nibble interface defines the first nibble clocked in or out as the most significant of the pair.

For both byte-wide and nibble operation, the NRZ write data is latched by the P32P4911A on the rising edge of the WCLK input. The WCLK frequency must be appropriate for the data rate chosen or else overflow/underflow will occur. It is recommended that WCLK be connected to RCLK to prevent this from occurring. In byte-wide mode, as each NRZ byte is input to the P32P4911A, its parity is checked against the controller supplied parity bit NRZP.

In data read mode, the NRZ data will be presented to the controller near the falling edge of RCLK so that it can be latched by the controller on the rising edge of RCLK. When RG goes High, the selected NRZ interface will output Low data until the sync byte has been detected. The first non-zero data presented will be the sync byte (69H). The NRZ interface is

at a high impedance state when not in data read mode. In byte-wide mode, an even parity bit , NRZP, is generated for each output byte.

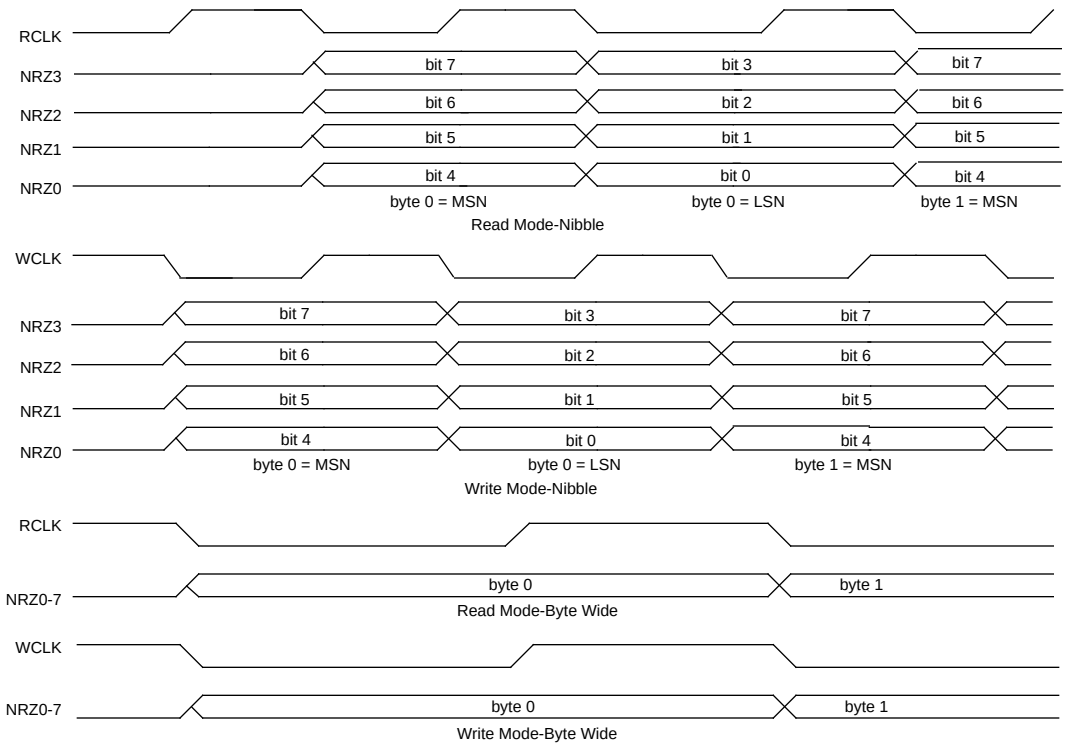

Figure 11: NRZ Timing

WRITE PRECODER

The P32P4911A implements a $1/(1 \oplus D^2)$ write precoder which is used to precode the serialized encoder data for PR4. The state of the precoder is preset to 0,0 upon exiting write mode. This guarantees that precoder will begin the next write in the 0,0 state. The state of the precoder is not guaranteed when the write data (WD/$\overline{WD}$) changes from sync field to encoded data. The result is that one of 2 different write data patterns or their inverses may be written for a particular write. All four of these patterns will decode properly upon read back. As a result of the fact that the write data toggle flip-flop is utilized as part of the precoder, the read/write amplifier connected to the P32P4911A must not contain a T flip-flop. The precoder block diagram is shown in Figure 12.

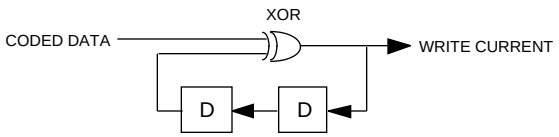

Figure 12: Precoder Block Diagram

WRITE PRECOMPENSATION

The write precompensation circuitry is provided to compensate for media bit shift caused by magnetic nonlinearities. The circuit recognizes specific write data patterns and can add delays in the time position of write data bits to counteract the magnetic nonlinearity effect. The magnitude of the time shift, WPC, is programmable via the Write Precomp Register and is made proportional to the time base generator's VCO period (i.e., data rate). The circuit performs write precompensation only on the second of two consecutive "ones" and only shifts in the late direction. If more than two consecutive "ones" are written, all but the first are precompensated in the late direction.

Servo Demodulator Circuit Description

Servo functionality is provided by two separate circuits: the servo full-wave rectifier circuit, and the previously described dual level pulse qualifier circuit. To support embedded servo applications, P32P4911A provides separate programmable registers for servo mode filter cutoff frequency, boost, and qualification threshold. The values programmed in these registers are selected upon entry into servo mode (SG=1). The RDS pulse polarity is programmable via the Servo Mode Select (SMS) bit in the Data Rate Register. This bit also determines the polarity of the RDS/$\overline{\text{RDS}}$ output. In addition, the RDS/$\overline{\text{RDS}}$ pulse width is also programmable via the RDSPW bit in the sample Loop Control Register (SLC).

The servo demodulator circuit outputs a full wave rectified version of the signal at DP/DN to the SEROUT pin when SG=1. The signal is referenced to the SREF output pin which is biased at about 3.1V below VPA. The SEROUT signal has a gain of 0.6 V/Vppd so that a 1.4V signal at DP/DN will produce a 0.84V peak excursion at SEROUT. When SG=0, the SEROUT pin outputs either SREF or SREF + 200 mV. The SELVRC input pin selects which DC voltage is output in this mode. The 200 mV offset can be used to calibrate the gain of the A/D converter which is driven by the SEROUT signal.

Servo Timing Outputs

The dual level qualifier that was previously described is used to generate the RDS/$\overline{\text{RDS}}$ and PPOL timing signals. The RDS/$\overline{\text{RDS}}$ output pin pulses Low for each positive or negative servo peak that is qualified by the dual level qualifier. The pulse width of RDS/$\overline{\text{RDS}}$ may be selected as either 15 ns or 27 ns with the RDSPW bit in the Sample Loop Control Register. The PPOL output pin provides the pulse polarity information for the qualified peaks, where PPOL=1 for a positive peak and PPOL=0 for a negative peak. To reduce noise propagation, the RDS/$\overline{\text{RDS}}$ and PPOL outputs are only active in servo mode.

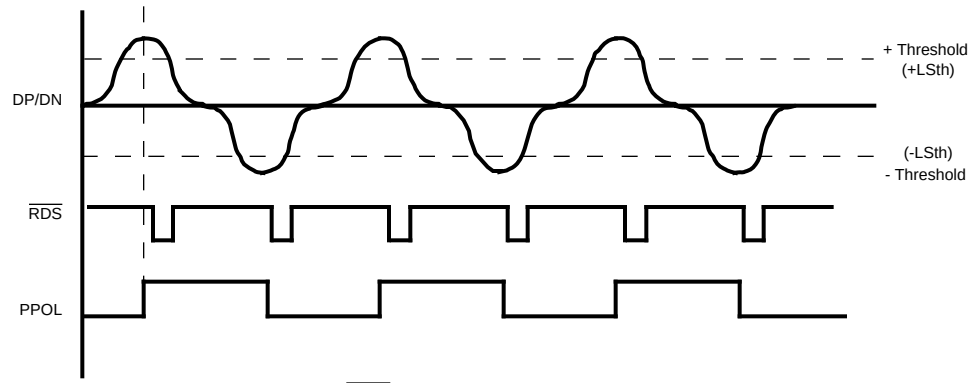

Figure 13: RDS/$\overline{\text{RDS}}$ and PPOL vs. DP/DN Relationship

Serial Port Circuit Description

The serial port interface is used to program the P32P4911A's seventeen internal registers. The serial port is enabled for data transfer when the Serial Data Enable (SDEN) pin is High ("1"). SDEN must be asserted High prior to any

transmission and it should remain High until the completion of the transfer. At the end of each transfer SDEN should be brought Low ("0").

When SDEN is High, the data presented to the Serial Data (SDATA) pin will be latched into the P32P4911A on each rising edge of the Serial Clock (SCLK). Rising edges of SCLK should only occur when the desired bit of address or data is being presented on the serial data line. Serial data transmissions must occur in 16-bit packets. If more than 16 rising edges of SCLK are received during the time that SDEN is High, only the last 16 are considered valid. For all valid transmissions, the data is latched into the internal register on the falling edge of SDEN.

Each 16-bit transmission consists of a read/write control bit (must always be reset, i.e., R/$\overline{W}$ = "0" for write only) followed by 3 device select bits, 4 address bits and eight data bits. The device select and address bits select the internal register to be written to. The device select, address and data fields are input LSB first, MSB last, where LSB is defined as Bit 0. The three device select bits select the type of device on the Philips Semiconductors serial bus to be communicated with and must be set to S0 = 0 or 1 (depending on register to be selected), S1 = 1, and S2 = 0 when communicating with the P32P4911A. The figure below shows the serial interface timing diagram.

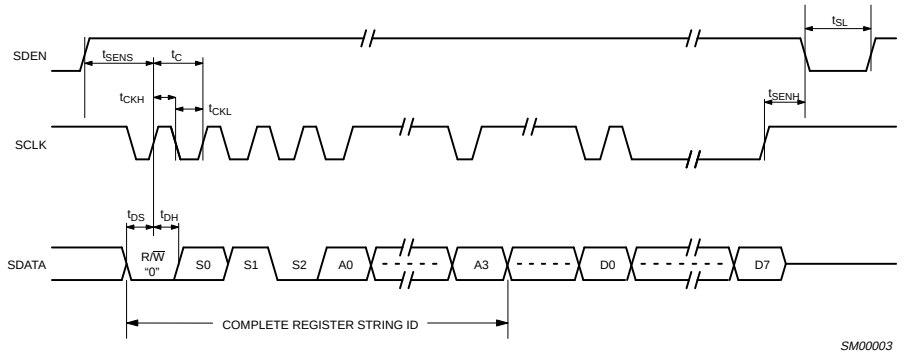

Figure 14: Serial Interface Timing

Description of Operating Modes

The fundamental operating modes of the P32P4911A are controlled by the Servo Gate (SG), Read Gate (RG), and Write Gate (WG/$\overline{WG}$) input pins. The exclusive assertion of any these inputs causes the device to enter that mode. If none of these inputs is asserted, the device is in the idle mode. If more than one of the inputs is asserted, the mode is determined by the following hierarchy: SG overrides RG which overrides WG/$\overline{WG}$. The mode that is overriding takes effect immediately.

RG and SG are asynchronous inputs and may be initiated or terminated at any position on the disk. WG/$\overline{WG}$ is also an asynchronous input, but should not be terminated prior to the last output write data (WD/$\overline{WD}$) pulse.

Mode Control

WG/$\overline{WG}$	RG	DEVICE MODE	DESCRIPTION
0/1	0	Idle Mode	DS VCO locked to F_{TBG}. NRZ7-0 tri-stated.
0/1	1	Data Read Mode	DS PLL acquisition, adaptive equalizer training, code word boundary search and detect, decode, sync byte detect, and NRZ data output. DS VCO switched from F_{TBG} to RD after preamble detect. RCLK gen. input switched from F_{TBG} to DS VCO. RCLK re-synchronized to RD at code word boundary detect. NRZ7-0 active.
1/0	0	Data Write Mode	Write mode preamble insertion and data write. DS VCO locked to F_{TBG}. RCLK synchronized to F_{TBG}. WD and $\overline{WD}$ active. NRZ7-0 = inputs.
1/0	1	Read Override	RG overrides WG/$\overline{WG}$ which causes any write in progress to cease and Data Read Mode to be entered.

Idle Mode Operation

If SG, RG, and WG/$\overline{WG}$ are not active, the P32P4911A is in idle mode. When in idle mode, the Time Base Generator and the Data Separator PLL are running and the Data Separator PLL is phase-frequency locked to the TBG VCO output. The AGC, continuous time filter, and pulse qualifiers are active but the outputs of the pulse qualifiers are disabled. The continuous time filter is using its programmed values for cutoff frequency and boost determined by the data mode registers. The AGC operation is the same as in the VCO preamble portion of a data read. Servo burst capture is operational in idle mode but the filter and AGC settings are for data reads and not for servo reads as would be the case if the device was in servo mode. The RDS/$\overline{RDS}$ and PPOL outputs are disabled in idle mode.

Servo Mode Operation

If SG is High, the device is in the servo mode. This mode is the same as idle except that the filter cutoff and boost settings are switched from those programmed for data read mode to those programmed for servo mode, the AGC is switched to servo mode, and the RDS/$\overline{RDS}$ and PPOL and outputs are enabled. The assertion of SG causes read mode, write mode, and the power down register settings for the front end to be overridden.

Write Mode Operation

The P32P4911A supports three different write modes; Normal write mode, direct write mode #1 and direct write mode #2. The direct write modes require that either the direct write bit, bit 0 of the Control Operating Register, or the $\overline{DWR}$ pin be active. All three write modes require that the Data Separator be powered on. The active polarity of write gate can be selected by programming the WGP bit in the Control Operating Register. The $\overline{PDWN}$ input should be kept Low until all registers are properly loaded to prevent an illegal write operation at power up.

Normal Write Mode

The P32P4911A is in the normal write mode if WG/$\overline{WG}$ is active, $\overline{DWR}$ is High, and the direct write bit in the Control Operating Register is Low. A minimum of one NRZ time period must elapse after RG goes Low before WG/$\overline{WG}$ can be set active. The Data Separator PLL is phase-frequency locked to the TBG VCO output in this mode.

In normal write mode, the circuit first autogenerates the VCO sync pattern, then scrambles the incoming NRZ data from the controller, encodes it into 8,9 GCR formatted data, precodes it, precompensates it, feeds it to a write data toggle flip-flop, and outputs it to the preamp for storage on the disk. When WG/$\overline{WG}$ goes inactive, the WD/$\overline{WD}$ outputs remain enabled but the active pull down current is reduced by a factor of 7 to reduce power consumption and the write data flip-flop is reset to guarantee that the WD/$\overline{WD}$ outputs represent a zero state.

In normal write operation, when the write gate (WG/$\overline{WG}$) goes active, the VCO sync field generation begins, which causes a continuous "2T" pattern at the WD/$\overline{WD}$ outputs {(1,1,-1,-1,1,1,-1,-1...) in the write current domain}. The NRZ inputs must be Low and must be held Low for the duration of the VCO sync field generation. The minimum required sync field is equivalent to 8 byte times.

The P32P4911A also allows the precoder to be preset when the first training byte arrives at the precoder. With Control Operating Mode Register #2 bit 3 (TME) and bit 0 (PCSDIS) set to 0, the P32P4911A allows presetting of the precoder. Bit 2 (PCSPOL) of the Control Operating Mode Register #2 allows the precoder to be preset if PFSPOL is set to 1 and reset if set to 0.

Training and Sync Byte Generation

The P32P4911A supports two modes of sync byte detection, single byte and dual "or" byte, and two modes of training and sync byte generation, manual and semi-automatic. The manual mode is generally recommended because it can be used for either dual or single sync byte detection and provides more flexibility in altering the number of training bytes to be written. The semi-automatic mode can only be used to generate an internally fixed number of training bytes and a single sync byte, but saves controller state machine space.

Manual Mode

In the manual mode, the device will continue to autogenerate the sync field pattern until a 93H is latched at the NRZ interface, and detected. The device encodes the 93H pattern and writes the result as the training pattern.

For the single sync byte detection mode, a recommended minimum of 5 bytes of 93H must be written to the NRZ interface to write the 5 byte equalizer training pattern. Next, the NRZ data must be changed to 69H for 1 byte time to write the single sync byte.

For the dual sync byte detection mode, a recommended minimum of 4 bytes of 93H must be written to the NRZ interface to write the minimum 4 byte equalizer training pattern. The NRZ data must then be changed to 1FH for one byte time to write the first sync byte. The NRZ data must then be changed to 93H for one byte time to write a training/propagation byte. Next, the NRZ data must be changed to 69H for one byte time to write the second sync byte.

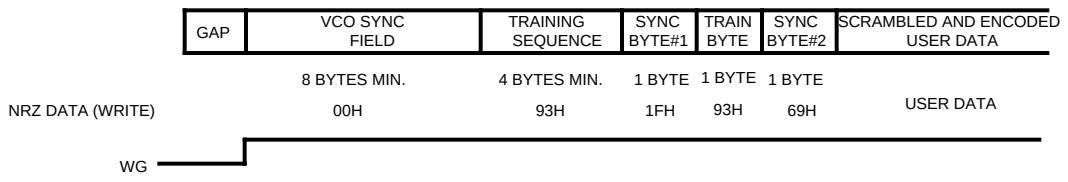

Figure 15: Hard Sector Write Sequence - Dual Sync

Semi-Automatic Mode

In the semi-automatic mode, the device will continue to autogenerate the sync field pattern until a FFH is latched at the NRZ interface, and detected. The device then internally generates the encoded the 93H pattern for 5 byte times and writes the result as the training pattern. It then internally generates the encoded 69H pattern for 1 byte time to write the single sync byte. To maintain proper controller synchronization, the FFH should be presented at the NRZ interface for

a total of 6 byte times. Note that the semi-automatic mode can only be used to write single sync byte format and the training pattern length is fixed at 5. This mode is useful if controller state machine space is extremely limited.

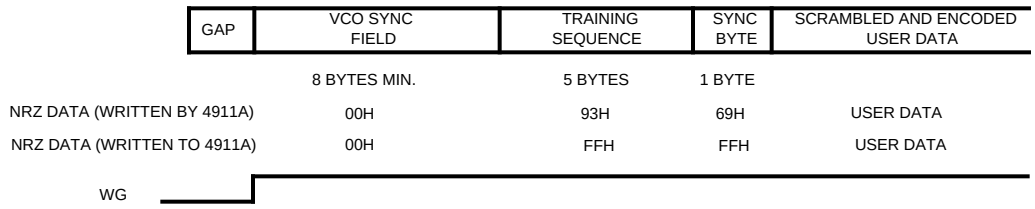

Figure 16: Hard Sector Semi-Auto Write Mode

User Data

The user data must be presented at the NRZ interface immediately following the last NRZ sync byte written. Finally, after the last byte of user data has been clocked in, the WG/$\overline{\text{WG}}$ must remain active for a minimum of 16 NRZ bit times in byte-wide mode to ensure the that the device is flushed of data (The delay is 21 NRZ bit times in nibble mode). WG/$\overline{\text{WG}}$ can then go inactive. WD/$\overline{\text{WD}}$ stops toggling a maximum of 2 NRZ (RCLK) time periods after WG/$\overline{\text{WG}}$ goes inactive.

Direct Write Mode #1

In this direct write mode, the NRZ data from the byte-wide interface bypasses the scrambler, the 8,9 encoder and the precoder, but is precompensated before going to the write data flip-flop and then to the WD/$\overline{\text{WD}}$ output pins. The RCLK output is changed from 9 VCO clock periods to 8 VCO clock periods with a 3/8 duty cycle. The purpose of routing the signal to the precomp circuit is to generate a return to zero pulse every time a "1" occurs in the data so that the write data flip-flop is toggled. WCLK is not required to latch the byte-wide NRZ data into the NRZ interface since the data is latched by an internal version of RCLK, but the NRZ data must be valid no later than 12 ns after the rising edge of the RCLK output pin. Direct write mode #1 is selected by setting the DW bit (bit 0) in the Control Operating Register. and is entered when the WG/$\overline{\text{WG}}$ input is active. This mode is not valid when using the nibble NRZ interface. Note that Direct Write Mode #2 will override Direct Write Mode #1.

Direct Write Mode #2

In this direct write mode, the data presented at the DWI/$\overline{\text{DWI}}$ input pins directly toggles the write data flip-flop which drives the WD/$\overline{\text{WD}}$ output pins. No WCLK is required in this mode, and the WD/$\overline{\text{WD}}$ output is not resynchronized. Direct write mode #2 is selected by driving the $\overline{\text{DWR}}$ input Low and is entered when the WG/$\overline{\text{WG}}$ input is active. Note that the Direct Write Mode #2 will override Direct Write Mode #1.

Data Read Mode Operation

Data read mode is initiated by setting the Read Gate (RG) input pin High. This action causes the data synchronizer to begin acquisition of the clock from the incoming VCO sync pattern. To achieve this, the data synchronizer utilizes a fully integrated fast acquisition PLL to accurately develop the sample clock. This PLL is normally locked to the time base

generator output, but when the Read Gate input (RG) goes High, the PLL's reference input is switched to the filtered incoming read signal.

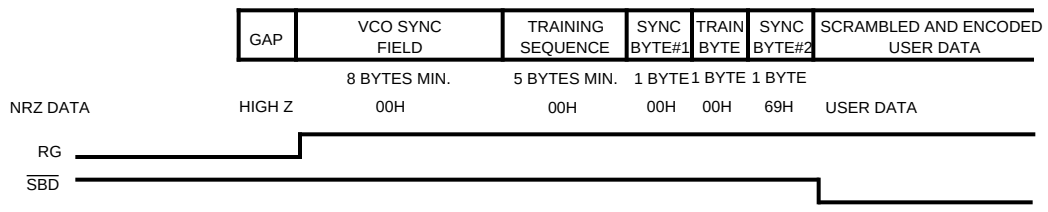

Figure 17: Read Sequence - Dual Sync Byte Modes

Acquisition of DS VCO Sync

When the Read Gate input is asserted, the read sequence is initiated. At this time an internal counter begins counting the pulses that are qualified by the dual level pulse qualifier given the polarity changes of the incoming 1,1,-1,-1,1,1 read back pattern defined by the VCO sync field. When the count reaches 4, the internal read gate is asserted and the DS PLL input is switched from the TBG's VCO output to the sampled data input. This is also the point at which the DS PLL's phase detector is switched from the phase-frequency detector to the decision directed phase detector. The counter is also used to determine whether the selected sync field count, SFC, has been achieved. When the counter reaches the value specified by SFC, the data synchronizer PLL is assumed to be locked and settled (VCO lock). Also at SFC, the phase detector gain switch and the AGC mode switch occur. To allow for different preamble lengths, the SFC can be set to 64, 80, 96 or 128 from the Sample Loop Control Register. These values for the SFC may be thought of as the number of code clock periods in the sync field, but they actually represent twice the number of incoming polarity changes required.

VCO Lock, PD Gain, AGC Mode Switch, and Code Word Boundary Detector Enable

At SFC, one of two phase tracking methods will be chosen depending on the Enable Phase Detector Gain Switching (GS) bit in the Control Operating Mode Register. When the GS bit is High, the phase detector gain is reduced by a factor of 6 or 10 as dictated by the GS_10 bit after the SFC count is reached. When the GS bit is Low, no phase detector gain switching takes place.

Also after SFC, the AGC feedback will be switched from the continuous time fullwave rectifier to sampled data feedback.

At SFC, the internal VCO lock signal activates the code word boundary detection circuitry to define the proper decode boundaries. Also, at count SFC, the RCLK generator source switches from the TBG's VCO output to the DS VCO clock signal which is phase locked to the incoming read data samples. The DS VCO is assumed locked to the incoming read samples at this point. At SFC a maximum of 1 RCLK time period may occur for the RCLK transition, however, no short duration glitches will occur. After the code word detection circuitry finds the proper code word boundary, the RCLK generator is again resynchronized to guarantee that the RCLK is in sync with the data. The RCLK output will not glitch and will not toggle during this RCLK generator resynchronization for up to 2 byte times maximum.

Also at the code word boundary detect, the internal 9-bit code words are allowed to pass to the ENDEC for decoding. This decoding will occur until read gate is deasserted.

ADAPTIVE EQUALIZER TRAINING SEQUENCE

TRAINING SEQUENCE FOR SINGLE SYNC BYTE MODE

As was previously discussed, in a single sync byte type write sequence, a minimum of 5 bytes of NRZ 93H and one byte of 69H must be written between the end of the VCO sync field and the beginning of the user data. The 5 bytes of 93H are 8,9 encoded and precoded during write mode to produce the adaptive equalizer training pattern. During read mode, the encoded 93H sequence (100110011 read data sequence) and the encoded 69H are used to adaptively train the inner two taps of the five tap transversal filter in a zero forcing manner. The error at the filter output is integrated to derive the tap weight multiplying coefficient, Km1. Both of these inner taps use the same Km1. It is anticipated that the continuous time filter will be used for coarse equalization and that transversal filter will be used adaptively for fine tuning. This will reduce Km's range and accuracy requirements. Since there are encoded user data patterns that will not produce an equalizer correction error, an equalization hold during data mode can be selected from the Sample Loop Control Register. If the equalizer is programmed to adapt only during the training sequence, the sync byte detect signal is used to hold the Km1 value. After the training pattern, if the loop is active during user data, the equalizer loop gain will be reduced by 7. The loop's integration time constant is made inversely proportional to the selected data rate.

The Km1 coefficient can be held at the present instantaneous value by asserting the EQHOLD input. If EQHOLD is asserted, the Km1 value will not be changed by either exiting read mode, subsequent training patterns, or by subsequent data patterns. When EQHOLD is deasserted, the equalizer will resume its normally programmed functionality. The Km1 value can be held with reasonable accuracy for up to 1 ms to make the number of code periods required for acquisition data rate independent.

TRAINING SEQUENCE FOR DUAL SYNC BYTE MODE

The adaptive equalizer training used for the dual sync byte detection mode is the same as that used in the single sync byte mode except that the adaptation occurs over the 4 encoded 93H bytes, sync byte #1 (1FH), another 93H and sync byte #2 (69H). This occurs because the Sync Byte Detect ($\overline{SBD}$) is what disables the adaptation if adaptation is enabled only during the training sequence. The number of consecutive 93H training bytes may be reduced in dual sync byte mode because the sync byte #1 has been chosen to have the same training properties as the 93H training byte.

SYNC BYTE DETECT AND NRZ OUTPUT

The P32P4911A implements a dual "OR" type sync byte detection which offers increased sync byte detection capability while maintaining backward compatibility with the single sync byte format and detection. The two bytes of the dual sync byte are separated by a training byte to allow for Viterbi error propagation that may be caused by an error in the first sync byte. The training byte 93H was chosen to provide the adaptive equalizer an ideal training signal.

As the read data is 8,9 decoded, it is compared to one of two internally fixed sync bytes (1FH or 69H). If the 1FH byte is found, the $\overline{SBD}$ output will go Low 18 code clocks (2 byte times) later and the 69H byte will be the first non-zero byte presented at the NRZ interface. If a match of the 69H byte is the first found, the sync byte detect ($\overline{SBD}$) pin goes Low and the NRZ output data that until now was held Low, is changed to 69H. The next byte presented on the NRZ outputs is the first byte of user data. $\overline{SBD}$ will remain Low and NRZ data will continue to be presented at the NRZ interface until the read gate is deasserted at which point $\overline{SBD}$ goes High and the NRZ outputs go to a high impedance state.

SURFACE DEFECT SCAN MODE

The P32P4911A helps check for media defects using the surface defect scan mode. In order to use this mode the part must have the byte-wide interface enabled. In write mode, all zeros are presented (written) at the NRZ interface. When this pattern is to be read back, bit 7 (DSE bit) of the N Counter Register is enabled which enables the surface defect scan mode. The survival sequence register must also be turned off (BYPSR bit). In this mode, $\overline{SBD}$ will transition Low at SFC. The NRZ7 pin is monitored. If no defect occurs, the NRZ7 pin will stay Low. If a defect occurs, the NRZ7 pin will transition

High on the falling edge of RCLK and stay high as long as the defect is present, transition back Low on the next falling edge of RCLK when the defect is not present.

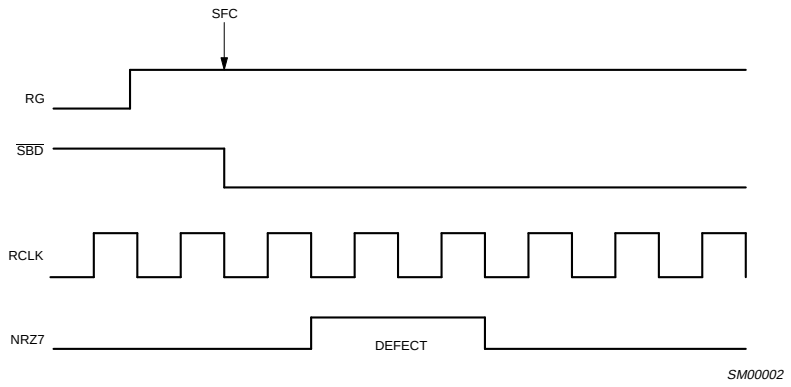

Figure 18: Surface Defect Scan Mode

Power Down Operation

The power management modes of the P32P4911A are determined by the states of the Power Down Register bits and the $\overline{PDWN}$ and SG inputs. The individual sections of the chip can be powered down or up using the Power Down Register. A High level in a Power Down Register bit disables that section of the circuit. The power down information from the Power Down Register takes effect immediately after the SDEN pin goes Low.

When the $\overline{PDWN}$ input is Low, the chip goes into full power down mode regardless of the power down register settings or the state of the SG input.

When $\overline{PDWN}$ is High, SG will force the AGC, filter, and pulse qualifier circuits (front end) to be active by overriding the front end register bit. The back end power down register bits, which include the Data Separator and Time Base Generator are not affected by the SG input.

The serial port is active in all power down modes.

The time to restart from a full power down is dependent on the PLL loop filter and the data rate.

The truth table for the various modes of operation is shown below:

SG, $\overline{PDWN}$:	**1,1**	**1,0**	**0,1**	**0,0**
Front End	ON	OFF	R	OFF
Data Separator	R	OFF	R	OFF
Time Base Generator	R	OFF	R	OFF
Serial Port	ON	ON	ON	ON

R = Controlled by register bit.
(Register bit =1 turns circuits OFF,
Register bit = 0 turns circuits ON)

REGISTER DESCRIPTIONS

Serial Port Register Definitions

Complete Register ID String	A3	A2	A1	A0	S2	S1	S0	R/$\overline{W}$	
Power Down Register (PD)	0	0	0	0	0	1	0	0	04H
	Bits 7-6	TPC/1-0	Test point C/D control (TME = 0) TPC+/TPC- TPD+/TPD- TPE 0X = disabled disabled disabled 1X = DP/DN CP/CN disabled SG = 1 1X = disabled disabled disabled SG = 0						
		TPC /D1-0	Test Point C/D Control (TME = 1) TPC+/TPC- TPD+/TPD- TPE(AGCSEL=0) TPE(AGSEL=1) 00* = disabled disabled disabled disabled 01 = DP/DN CP/CN disabled low-z oneshot Servo calibration enabled input mode to qualifiers, etc. 10 = DP/DN CP/CN full wave fastrec rectifier out oneshot output mode from filter/offset canceller 11 = filter filter full wave ultra fast bypass bypass rectifier out decay ctrl.						
	Bits 5-4	ATOSEL	Output select for ATO test point 00 = MAXREF/2 01 = DAC output enabled DAC test mode 10 = Amplitude Asymmetry Monitor output (QASYM) selected 11 = Channel Equalization Monitor output (Q) selected						
	Bit 3	ACCPL	Internal AC coupling enable/disable (TME = 0) 0 = Internal AC coupling, AGC switched to sample mode at SFC 1 = Internal AC coupling, AGC is always in continuous mode Internal AC coupling enable/disable (TME = 1) 0 = Internal AC coupling is enabled 1 = Internal AC coupling is disabled						
	Bit 2	TB	Time Base Generator power down 0 = power up 1 = power down;						
	Bit 1	DS	Data Separator power down 0 = power up 1 = power down;						
	Bit 0	PD	AGC, Filter, Pulse Detector, and Servo power down 0 = power up 1 = power down;						

* Servo calibration mode enabled, strobing must occur for operation.

Data Filter Cutoff Register (FC)	0	0	0	1	0	1	0	0	14H
	Bit 7	3TAPEN	3 Tap equalizer enable 0 = enable 5 tap equalizer (Normal operation) 1 = enable only 3 tap equalizer (4901 mode)						
	Bits 6-0	FC6-0	Filter cutoff frequency setting in non-servo mode fc (MHz) = 0.301 * FC - 1.142 $44 \leq FC \leq 117_{dec}$						

Serial Port Register Definitions (Continued)

Complete Register ID String	A3	A2	A1	A0	S2	S1	S0	R/$\overline{W}$	
Servo Filter Cutoff Register (FCS)	0	0	1	0	0	1	0	0	24H
	Bit 7	PDM	Servo Peak Detector Mode 0 = Window Qualifier 1 = Hysteresis Qualifier						
	Bits 6-0	FCS6-0	Filter cutoff frequency setting in servo mode fc (MHz) = 0.277 * FC + 0.0802 $14 \leq FC \leq 43_{dec}$						
Data Filter Boost Register (FB)	0	0	1	1	0	1	0	0	34H
	Bit 7	LZTC	Non Low-Z vs. Low-Z time constant 0 = 15:1 1 = 5:1						
	Bits 6-0	FB6-0	Filter boost setting in data mode Boost (dB) = 20 * log[0.021848 * FB + 0.000046 * FB * FC + 1] $0 \leq FB \leq 127_{dec}$						
Servo Filter Boost Register (FBS) and Group Delay Equalizer Register	0	1	0	0	0	1	0	0	44H
	Bits 7-6	FBS 1-0	Filter boost setting in servo mode 00 = 0 dB 01 = 2 dB 10 = 4 dB 11 = 6 dB						
	Bits 5-0	FGD5-0	Filter Group Delay Δ % In all modes Group Delay Δ % = 0.9783 * (FGD 4-0) - 0.665, where FGD5 = 1 is positive, 0 is negative $0 \leq FGD \leq 31_{dec}$						
Viterbi Detector Threshold Register (VDT)	0	1	0	1	0	1	0	0	54H
	Bit 7	BYPSR	Survival Sequence Register Bypass/Write Precode Bypass 0 = bypass disabled (normal operation) 1 = bypass enabled						
	Bits 6-0	VD6-0	Viterbi qualification threshold voltage Vth (mV) = 7.874 * VD $45 \leq VD \leq 127_{dec}$						
Data Level Threshold Register (LD)	0	1	1	0	0	1	0	0	64H
	BIts 7-6		Not used						
	Bits 5-0	LD5-0	Data level qualification threshold voltage if WP/LT Register : ALE = 0 (Fixed levels) Prior to SFC : Lth (mV) = 10.47 * LD After SFC : Lth (mV) = 7.44 * LD $16 \leq LD \leq 63_{dec}$ if WP/LT Register : ALE = 1 (Adaptive levels) After SFC : Lth (%) = 1.574 * LD						

Serial Port Register Definitions (Continued)

Complete Register ID String	A3	A2	A1	A0	S2	S1	S0	R/$\overline{W}$	
Servo Level Threshold Register (LDS)	0	1	1	1	0	1	0	0	74H
	Bits 7-6	SAGC LVL1-0	Servo mode AGC level control 00 = 1.40 Vppd 01 = 1.30 Vppd 10 = 1.20 Vppd 11 = 1.10 Vppd				VRC-AGCREF output voltage 128 mV 253 mV 378 mV 503 mV		
	Bits 5-0	LDS5-0	Servo level qualification threshold voltage LSth (mV) = 10.47 * LDS						

Serial Port Register Definitions (Continued)

Complete Register ID String	A3	A2	A1	A0	S2	S1	S0	R/$\overline{W}$	
Control Test Mode Register (CT)	1	0	0	0	0	1	0	0	84H
	Bit 7	EFR	Sample clock source 0 = sample clock is from the DS VCO, normal operation 1 = sample clock is from the TBG output, a test mode						
	Bit 6	ECP	Factory reserved bit, must be set to 0 in application (enables charge pump)						
	Bits 5-3	TP3-1	Multiplexed test point selection						

TP3	TP2	TP1	Function	TPA+, TPA-	TPB+, TPB-
0	0	0	Test Points Off	high impedance	high impedance
0	0	1	Survival Out/In	SSOUT A, B (sngl)	SSIN A+, A- (sngl),
0	1	0	Eq Cont/Phase Det	Equalizer Control (diff)	Phase Detect Out (diff),
0	1	1	Viterbi Survival In	SSIN B+,B- (sngl)	SSIN A+, A- (sngl),
1	0	0	Equalizer Outputs	Equalizer A (diff)	Equalizer B (diff)
1	0	1	EQ out/Survival In	Equalizer A (diff)	SSIN A+, A- (sngl)
1	1	0	EQ out/Survival Out	Equalizer A, B (sngl)	SSOUT A, B (sngl)
1	1	1	EQ out/VCO/2	Equalizer A, B (sngl)	DS VCO/2 (diff) for RG = 1
			EQ out/TBG out	Equalizer A, B (sngl)	TBG out (diff) for RG = 0

Control Test Mode Register (CT)	1	0	0	0	0	1	0	0	84H
	Bit 2	RCK2X/ VRDT	Enable double RCLK drive (TME = X) 0 = RCLK drive at 1x in byte wide mode, 2x in nibble mode 1 = RCLK drive at 2x in both byte wide and nibble mode Enable VRDT input (TME=1) 0 = Viterbi survival outputs to the data decoder, normal use 1 = Digital input to the data decoder, fixed AGC filter gain = 24dB used in testing only.						
	Bit 1	DT	Enable TBG pump down 0 = not in pump down test mode 1 = continuous pump down, for test only						
	Bit 0	FSB/UT	Training Termination (TME = 0) 0 = termination training when $\overline{SBD}$ goes Low 1 = terminate training 4 bytes after framing Enable TBG pump up (TME = 1) 0 = not in pump up test mode 1 = continuous pump up, for test use only FLTR1+ sources current; FLTR1- sinks current						

Serial Port Register Definitions (Continued)

Complete Register ID String	A3	A2	A1	A0	S2	S1	S0	R/$\overline{W}$	
N Counter Register (N)	1	0	0	1	0	1	0	0	94
	Bit 7	DSE	Defect Scan Enable 0 = normal operation 1 = defect scan mode enabled						
	Bits 6-0	N6-0	N Counter $2 \leq N \leq 127$						
M Counter Register (M)	1	0	1	0	0	1	0	0	A4H
	Bits 7-0	M7-0	M Counter $2 \leq M \leq 255$ F_{TBG} = FREF * [(M+1) ÷ (N+1)]						
Data Rate Register (DR)	1	0	1	1	0	1	0	0	B4H
	Bits 7	SMS	Servo Mode Select 0 = RDS is active Low (normal operation) 1 = RDS is active High						
	Bits 6-0	DR6-0	Fvco (MHz) = 9/8 Data Rate = 1.143 * DR + 4.986 for RR = 10 kΩ $37 \leq DR \leq 127$						

Serial Port Register Definitions (Continued)

Complete Register ID String	A3	A2	A1	A0	S2	S1	S0	R/$\overline{W}$	
Write Precomp / Level Threshold Time Constant Register (WPLT)	1	1	0	0	0	1	0	0	C4H
	Bits 7-6	TC2-1	Adaptive Level qualification threshold time constant for Decision Directed Phase Detector. (Valid After SFC)						
	TC2 0 0 1 1		TC1 0 1 0 1		Time Constant 200 ns 400 ns 600 ns 800 ns				
	Bit 5	ALE	Enable adaptive level qualification in Decision Directed Phase Detector 0 = fixed level qualification 1 = adaptive mode						
	Bit 4	FREZQ	Freeze Channel Quality Factor and Asymmetry Factor at Sync Byte Detect 0 = Update during read 1 = Freeze at $\overline{SBD}$						
	Bits 3-0	WPC3-0	Write Precomp setting						

WPC3	WPC2	WPC1	WPC0	Write Precomp Magnitude
0	0	0	0	No precomp
0	0	0	1	2.1% code period shift
0	0	1	0	4.2% code period shift
0	0	1	1	6.3% code period shift
0	1	0	0	8.4% code period shift
0	1	0	1	10.5% code period shift
0	1	1	0	12.6% code period shift
0	1	1	1	14.7% code period shift
1	0	0	0	16.8% code period shift
1	0	1	0	21.0% code period shift
1	0	1	1	23.1% code period shift
1	1	0	0	25.0% code period shift
1	1	0	1	27.3% code period shift
1	1	1	0	29.4% code period shift
1	1	1	1	31.5% code period shift

Serial Port Register Definitions (Continued)

Complete Register ID String	A3	A2	A1	A0	S2	S1	S0	R/$\overline{W}$	
Control Operating Register (CM1)	1	1	0	1	0	1	0	0	D4H
	Bit 7	AUTOTR	Enables Semi-Automatic training and sync byte generation 0 = disabled (normal operation) 1 = enabled (single sync byte only)						
	Bit 6	AGCSEL	Selects AGC control mode 0 = Direct mode i.e., external control signals must be provided 1 = Timed mode i.e., control provided by one shot timing from SG and WG/$\overline{WG}$						
	Bit 5	WGP	Write gate polarity 0 = active High, (normal operation) 1 = active Low						
	Bit 4	NIB	Enable Nibble interface 0 = Nibble interface disabled, i.e., byte-wide interface enabled 1 = Nibble (NRZ3-0) interface enabled						
	Bit 3	BT	Bypass Time Base Generator 0 = data synchronizer reference frequency is TBG output, (normal operation) 1 = data synchronizer reference frequency is FREF input						
	Bit 2	SD	Disable Data Scrambler/Descrambler 0 = enabled, (normal operation) 1 = disabled						
	Bit 1	GS	DS Phase Detector gain switching 0 = enabled, (normal operation) 1 = disabled						
	Bit 0	DW	Enable Direct Write From Byte-wide NRZ (Bypasses scrambler and ENDEC) 0 = disabled; (normal operation) 1 = enabled,						

Serial Port Register Definitions (Continued)

Complete Register ID String	A3	A2	A1	A0	S2	S1	S0	R/$\overline{W}$	
Sample Loop Control Register (SLC)	1	1	1	0	0	1	0	0	E4H
	Bit 7	RDSPW	RDS output pulse width 0 = 15 ns 1 = 27 ns						
	Bits 6-5	SFC1-0	Sync Field Count						
	SFC1 0 0 1 1	SFC0 0 1 0 1	Sync Field Count (code clocks) 64 80 96 128						
	Bit 4	AEGS	Adaptive Equalizer Loop time constant shift 0 = equalizer loop time constant same in preamble and data fields 1 = equalizer loop time constant is increased to 7X in the data field elative to the preamble field, i.e. loop gain is reduced to 1/7						
	Bit 3	AED	Enable Adaptive Equalizer on Data Field 0 = adaptive equalizer disabled after preamble field 1 = adaptive equalizer in use after preamble field, if AEE bit = 1						
	Bit 2	AEE	Enable Adaptive Equalizer 0 = adaptive equalizer disabled 1 = adaptive equalizer enabled for use in preamble field, and after the preamble field if AED bit = 1						
	Bits 1-0	AGC1-0	AGC charge pump current in Sampled AGC mode AGC charge/discharge current (μA) = 2.66 * AGC * DR/RR (kΩ) 37 ≤ DR ≤ 127, e.g., RR = 10 kΩ e.g., for DR = 100 and AGC=10 $=2_{dec}$ charge pump current = 53 μA						
Damping Ratio Control Register (DRC)	1	1	1	1	0	1	0	0	F4H
	Bit 7	GS_10	Data separator PLL gain shift factor 0 = 6 1 = 10						
	Bits 6-0	D6-0	Damping amplifier gain A = D * (0.7 / 127) Damping Ratio = $\frac{A \times KVCO \times 0.25}{2\omega_n}$						

Serial Port Register Definitions (Continued)

Complete Register ID String	A3	A2	A1	A0	S2	S1	S0	R/$\overline{W}$	
Control Operating Mode Register #2 (CM2)	0	0	0	0	0	1	1	0	06H
	Bits 7-4	KM3-0	Equalizer outer tap coefficient km2 km2 = 0.0168 * KM (KM is in 2's compliment) 0111 = +0.117 0110 = +0.101 0101 = +0.0840 0100 = +0.0672 0011 = +0.0504 0010 = +0.0336 0001 = +0.0168 0000 = 0 1111 = -0.0168 1110 = -0.0336 1101 = -0.0504 1100 = -0.0672 1011 = -0.0840 1010 = -0.1010 1001 = -0.1170 1000 = -0.1350						
	Bit 3	TME	Test Mode Enable 0 = TPC and TPD active when SG = 1 and bit 7 of Power Down Control Register is 1 1 = TPC and TPD as set by bits 6 and 7 of the Power Down Control Register						
	Bit 2	PCSPOL	Precoder Polarity State 0 = Precoder state set to 0 1 = Precoder state set to 1						
	Bits 1-0	QTC1-0	Qasym and Q Time Constant Control (TME = 1) Qasym Q 00 = 100 ns 50 ns 01 = 200 ns 100 ns 10 = 400 ns 200 ns 11 = 800 ns 400 ns						
	Bit 0	PCSDIS	Precoder Set Disabled (TME = 0) 0 = Precoder initialization enabled 1 = Precoder initialization disabled						

PIN DESCRIPTIONS

Power Supply Pins

Pin Name	Type	Pin Function
VPA	-	AGC / Filter analog circuit supply
VPF	-	Time Base Generator PLL ECL plus Write pre-comp supply (connect to analog supply)
VPT	-	Time Base Generator PLL analog circuit supply
VPP	-	Data Separator PLL analog circuit supply
VPD	-	TTL Buffer I/O digital supply
VPC	-	Internal ECL, CMOS logic digital supply
VPS	-	Sampled data processor supply
VNA	-	AGC / Filter analog circuit ground
VNF	-	Time Base Generator ECL ground (connect to analog ground)
VNT	-	Time Base Generator PLL analog circuit ground
VNP	-	Data Separator PLL analog circuit ground
VND	-	TTL Buffer I/O digital ground
VNC	-	Internal ECL, CMOS logic digital ground
VNS	-	Sampled data processor ground
VNRX	-	AGC/Filter analog ground

Analog Input Pins

Pin Name	Type	Pin Function
VIA+, VIA-	I	AGC AMPLIFIER INPUTS: Differential AGC amplifier input pins

Analog Output Pins

Pin Name	Type	Pin Function
TPA+, TPA-	O	TEST PINS: Emitter output test points. Various signals are multiplexed to these test points by the Test Point Control Register. The signals include the equalizer control voltage and output, various timing loop control signals and the Viterbi survival register outputs. The test points are provided to show how the signal is being processed. Internal "pull down" resistors to ground are provided. To save power when not in test mode, the control test register bits 3-5 must be set to "0".
TPB+, TPB-	O	TEST PINS: Emitter output test points similar to TPA+ and TPA-. The pins are used to look at the other phase of the interleaved signals.
TPC+, TPC-	O	TEST PINS: Bi-directional test points which provide emitter outputs similar to TPA+ and TPA- and provide differential input capability. The pins are used to look at the normal outputs of the continuous time filter or the AGC amplifier output. These pins can also be driven with DP/DN like signals for back end testing.
TPD+, TPD-	O	TEST PINS: Bi-directional test points which provide emitter output test points similar to TPA+ and TPA- and provide differential input capability. The pins are used to look at the differentiated outputs of the continuous time filter or the AGC amplifier output. These pins can also be driven with CP/CN like signals for back end testing.
TPE	O	TEST PIN: Emitter output test point similar to TPA+. Provides servo FWR out when enabled.

Analog Output Pins (Continued)

Pin Name	Type	Pin Function
ATO	O	ANALOG TEST OUT: This test point output provides a monitor of one of three signals. They are the equalizer quality signal, the amplitude asymmetry signal, and the DAC outputs. The selected output is determined by the programming of the ATOSEL bits in the Power Down Register. If the DAC outputs are selected, the last DAC written to by the serial control register is the DAC monitored. Signal at ATO is referenced to MAXREF/2.
SEROUT	O	SERVO OUTPUT: This signal is a full-wave-rectified version of the differential signal at DP/DN. It is referenced to the SREF output voltage. Open emitter output which requires an external pull down current when $\overline{\text{SDIEN}}$ is high. When $\overline{\text{SDIEN}}$ is low, a 360 µA pull down current is interally provided.
SREF	O	SERVO REFERENCE OUTPUT: Reference voltage for the SEROUT signal. It is set to one Vbe below the VRC voltage. This is an open emitter output which requires an external pull down current when $\overline{\text{SDIEN}}$ is high. When $\overline{\text{SDIEN}}$ is low, a 360 µA pull down current is interally provided.
MAXREF		ATO REFERENCE OUTPUT: +3.2V DC reference voltage which can be used as a baseline for the ATO test point. Can be used for the reference for an external A/D converter.
AGCREF		AGC REFERENCE OUTPUT: Allows programmable fixed gain operation when connected to either or both of the BYPD or BYPS pins.

Analog Control Pins

Pin Name	Type	Pin Function
BYP	-	The data AGC integrating capacitor, C_{BYP}, is connected between BYP and VPA. This pin is used when not in servo read mode (SG = 0).
BYPS	-	The servo AGC integrating capacitor, C_{BYPS}, is connected between BYPS and VPA. This pin is used when in servo read mode (SG = 1).
FLTR1+, FLTR1-	-	TBG PLL LOOP FILTER: Differential connection points for the time base generator PLL loop filter components.
FLTR2+, FLTR2-	-	DS PLL LOOP FILTER: Differential connection points for the data separator PLL loop filter capacitor.
RR	-	CURRENT REFERENCE RESISTOR INPUT: An external 1%, 10 kΩ (for max data rate of 125 Mbit/s) or 12.1 kΩ (for max data rate of 100 Mbit/s) resistor is connected from this pin to ground to establish a precise internal reference current for the data separator and the time base generator DACs.
VRX	-	FILTER REFERENCE RESISTOR INPUT: An external 1%, 12.1 kΩ resistor is connected from this pin to ground to establish a precise PTAT (proportional to absolute temperature) reference current for the filter DACs.
VRC	-	AGC REFERENCE VOLTAGE: VRC is derived by a bandgap reference from VPA.
WRDEL	-	LOWZ ONE-SHOT ADJUST: The resistor connected between this pin and GND determines the length of the lowz period. $t_{LZ} = (R_{LZ} + 0.5) * 0.1$ µs/kΩ.
AGCDEL	-	FAST RECOVERY ONE-SHOT ADJUST: The resistor connected between this pin and GND determines the length of the fast decay period. $t_{FR} = (R_{FR} + 0.5) * 0.1$ µs/kΩ.
AGCRST	-	ULTRA FAST DECAY CURRENT ADJUST: The resistor connected between this pin and VPA determines the ultra fast decay current given by the equation I = (VPA - VBYP)/Rufd. This pin may be left open if ultra fast decay action is not required.

Digital Input Pins

Pin Name	Type	Pin Function
LOWZ	I	Low-Z MODE INPUT: TTL compatible CMOS control pin which, when pulled High, the input impedance is reduced to allow rapid recovery of the input coupling capacitor. When pulled Low, keeps the AGC amplifier and filter input impedance high. An open pin is a logic High.
FASTREC	I	FAST RECOVERY: TTL compatible CMOS control pin which, when pulled High, puts the AGC charge pump in the fast decay mode. An open pin is a logic High.
$\overline{\text{PDWN}}$	I	POWER DOWN CONTROL: CMOS compatible power control pin. When set to logic Low, the entire chip is in sleep mode with all circuitry, except serial port, shut down. This pin must be set to logic High in normal operating mode. Selected circuitry can be shut down by the Power Down Register. The $\overline{\text{PDWN}}$ pin must be either driven to a valid CMOS High level or externally pulled up since it is not internally pulled up.
$\overline{\text{HOLD}}$	I	AGC HOLD CONTROL INPUT: TTL compatible CMOS control pin which, when pulled Low, holds the AGC amplifier gain constant by turning off the AGC charge pump. The AGC loop is active when this pin is either at High or open.
EQHOLD	I	EQUALIZER HOLD CONTROL INPUT: TTL compatible control pin which, when pulled High causes the present adaptive equalizer tap weights to be held until the input is set Low. An open pin is at logic High.
FREF	I	REFERENCE FREQUENCY INPUT: Reference frequency for the time base generator. FREF may be driven either by a direct coupled TTL signal or by an ac coupled ECL signal. When bit 3 (BT) of the Control Operating Register (CM1) is set, FREF replaces the VCO as the input to the data separator.
WCLK	I	WRITE CLOCK: TTL compatible CMOS input that latches in the data at the selected NRZ interface on the rising edge. Must be synchronous with the write data NRZ input. For short cable delays, WCLK may be connected directly to pin RCLK. For long cable delays, WCLK should be connected to an RCLK return line matched to the NRZ data bus line delay. An open pin is at logic High.
RG	I	READ GATE: TTL compatible CMOS input that, when pulled High, selects the PLL reference input and initiates the PLL synchronization sequence. A High level selects the RD input and enables the read mode/address detect sequences. A Low level selects the time base generator output. An open pin is at logic High.
WG/$\overline{\text{WG}}$	I	WRITE GATE: TTL compatible CMOS input that, when pulled High, enables the write mode. The active state of WG/$\overline{\text{WG}}$ can be selected by the WGP bit in the control operating register. An open pin is at logic High.
SG	I	SERVO GATE: TTL compatible CMOS input that, when pulled High, enables the servo read mode. An open pin is at logic High.
VRDT	I	VITERBI READ DATA: A TTL or ac coupled PECL compatible input to the data separator back end, for testing purposes only. This pin is controlled by the VRDT bit in the Control Test Register (CT).
$\overline{\text{DWR}}$	I	DIRECT WRITE MODE 2 ENABLE: Enables DWI, $\overline{\text{DWI}}$ inputs to the write data flip-flop when input is Low. TTL compatible CMOS levels. Open pin is at logic High.

Digital Input Pins (Continued)

Pin Name	Type	Pin Function
DWI, $\overline{DWI}$	I	DIRECT WRITE INPUTS: Inputs connect to the toggle input of the write data flip-flop when $\overline{DWR}$ is Low. PECL input levels. Can be left open.
SELVRC	I	SERVO REFERENCE SELECT: TTL compatable input. When SG is low, this input determines where SREF (SELVRC=high) or SREF + 200 mV (SELVRC = low) is presented at SREF output. An open pin is logic high.
$\overline{SDIEN}$	I	SERVO TEST MODE: TTL compatible input that enables an internal pulldown current at the SREF and SEROUT pins. An open pin is logic high.

Digital Bi-directional Pins

Pin Name	Type	Pin Function
NRZ0-7	I/O	BYTE WIDE NRZ DATA PORT: TTL compatible CMOS bi-directional input/output. Input to the encoder when WG/$\overline{WG}$ is High. Output from the decoder when RG is High. The 4 LSBs are used in nibble mode. The 4 MSBs can be left open if not used.
NRZP	I/O	NRZ DATA PARITY BIT: Active when in Byte-Wide mode. TTL compatible CMOS bi-directional input / output. Generates even read parity when RG is High, and accepts even write parity when WG/$\overline{WG}$ is active. Can be left open if not used.

Digital Output Pins

Pin Name	Type	Pin Function
RCLK	O	READ REFERENCE CLOCK: A multiplexed clock source used by the controller. When RG is Low, RCLK is synchronized to the time base generator output, F_{TBG}. When RG goes High, RCLK remains synchronized to F_{TBG} until the SFC is reached. At that time, RCLK is synchronized to the data separator VCO. During a mode change, no glitches are generated and no more than one lost clock pulse will occur. Limited swing CMOS output levels.
NCLK	O	NIBBLE MODE CLOCK: A half byte clock synchronized to RCLK. It runs at twice the frequency of RCLK. Limited swing CMOS output levels. Signal present in byte-wide mode.
$\overline{SBD}$	O	SYNC BYTE DETECT: Transitions Low upon detection of sync byte. This transition is synchronous with the sync byte's placement on the NRZ lines. Once it transitions Low, $\overline{SBD}$ remains Low until RG goes Low, at which point it returns High. CMOS output.
WD, $\overline{WD}$	O	WRITE DATA: Write data flip-flop output. The data is automatically re-synchronized (independent of the delay between RCLK and WCLK) to the reference clock F_{TBG}, except in Direct Write mode 2. Differential PECL output levels.
RDS/$\overline{RDS}$	O	SERVO READ DATA: Read Data Pulse output for servo read data. Active Low limited swing CMOS output. Output active when SG is High, and High when SG is Low. The RDS/$\overline{RDS}$ output becomes active High if the Servo Mode Select bit (SMS) in the Data Rate Register is set.
PPOL	O	SERVO READ DATA POLARITY: Read Data Pulse polarity output for servo read data. Active High limited swing CMOS output. Negative pulse = Low, positive pulse = High. Output active when SG is High.

Serial Port Pins

Pin Name	Type	Pin Function
SCLK	I	SERIAL DATA CLOCK: Positive edge triggered clock input for the serial data. CMOS input levels.
SDATA	I	SERIAL DATA: Input pin for serial data; 8 register select bits first, followed by 8 data bits. The register select bits and data bits are entered LSB first, MSB last. CMOS input levels.
SDEN	I	SERIAL DATA ENABLE: A High level input enables data loading. The data is internally parallel latched when this input goes Low. CMOS input levels.

ELECTRICAL SPECIFICATIONS

Absolute Maximum Ratings

Operation beyond the maximum ratings may damage the device

Symbol	Parameter	Rating
Vp	Positive 5.0V Supply Voltage	-0.5 to 7V
	Storage Temperature	-65 to 150°C
	Solder Vapor Bath	215°C, 90s, 2 times
	Junction Operating Temperature	+135°C
	Output Pins	±10 mA
	Analog Pins	±10 mA
	Voltage Applied to other Pins	-0.3V to Vp+0.3V

Recommended Operating Conditions

Unless otherwise specified, the recommended operating conditions are as follows:
4.5V < POSITIVE SUPPLY VOLTAGE < 5.5V, 0°C < T_{amb} < 55°C for 100-lead LQFP and 25°C < T_j < 135°C. Currents flowing into the chip are positive.
Current maximums are currents with the highest absolute value.

Power Supply Current and Power Dissipation

Symbol	Parameter	Test Conditions	Min.	Nom.	Max.	Unit
I_{CC}	Supply current (VPn)	Outputs and test point pins open T_{amb} = 27°C		190		mA
PD	Power Dissipation Normal Mode	Outputs and test point pins open, T_{amb} = 27°C		1000	1530	mW
	PWR Data Separator Off	Power Down Register = 2d		500		mW
	PWR Data Separator Off and TBG Off	Power Down Register = 6d		500		mW
	PWR Idle through serial port	Power Down Register = 7d		125		mW
	Sleep Mode	$\overline{PDWN}$ = Low		1	9	mW

Analog Inputs

TEST POINT INPUTS

Symbol	Parameter	Test Conditions	Min.	Nom.	Max.	Unit
	TPC±, TPD± Input Bias Voltage	TPC±,TPD± selected as inputs		VPA -1.5		V

Digital Inputs

TTL COMPATIBLE CMOS INPUTS

Symbol	Parameter	Test Conditions	Min.	Nom.	Max.	Unit
V_{IL}	Input Low voltage		-0.3		0.8	V
V_{IH}	Input High voltage		2.0		VPD+0.3	V
I_{IL}	Input Low current	V_{IL} = 0.4V	-250			µA
I_{IH}	Input High current	V_{IH} = 2.4V			100	µA

FREF AND VRDT INPUTS

Symbol	Parameter	Test Conditions	Min.	Nom.	Max.	Unit
V_{IL}	Input Low voltage		-0.3		0.8	V
V_{IH}	Input High voltage		2.0		VPD+0.3	V
I_{ILF}	Input Low Current	V_{IL} = 0.4V	-400			µA
I_{IHF}	Input High Current	V_{IH} = 2.4V			500	µA

CMOS INPUTS

Symbol	Parameter	Test Conditions	Min.	Nom.	Max.	Unit
V_{ILC}	Input Low Voltage	VPC = 5.0V			1.5	V
V_{IHC}	Input High Voltage	VPC = 5.0V	3.5			V

PSEUDO ECL COMPATIBLE INPUTS

Symbol	Parameter	Test Conditions	Min.	Nom.	Max.	Unit
V_{IL}	Input Low Voltage		VPD-2.0		V_{IH}-0.25	V
V_{IH}	Input High Voltage		VPD-1.1		VPD-0.4	V
	Input Current		-100		+100	µA

Digital Outputs

CMOS Outputs

Symbol	Parameter	Test Conditions	Min.	Nom.	Max.	Unit
V_{OLC}	Output Low voltage	I_{OL} = +2 mA			0.45	V
V_{OHC}	Output High voltage	I_{OH} = -100 µA	0.7 * VPD			V

DIGITAL DIFFERENTIAL OUTPUTS (WD, $\overline{WD}$)

Symbol	Parameter	Test Conditions	Min.	Nom.	Max.	Unit
V_{OLD}	Output Low Voltage	I_{OL} = 2 mA	VPD-2.1		V_{OHD}-0.3	V
V_{OHD}	Output High Voltage	I_{OH} = 2 mA	VPD-1.4		VPD-0.5	V
	Output Sink Current			-3.5		mA
	Differential Voltage	| V(WD) - V($\overline{WD}$) |	0.6			Vppd

TEST POINT OUTPUT LEVELS

Symbol	Parameter	Test Conditions	Min.	Nom.	Max.	Unit
	Test Point Output Swing TPA+, TPA- TPB+, TPB-			0.7		Vppd
	TPC+, TPC- TPD+,TPD- TPE	C_{LOAD} = 5 pF	1.0		VPA-1.5	V
	Source Impedance TPC+/TPC- TPD+/TPD- TPE			30		Ω
	Output Current TPC+/TPC- TPD+/TPD- TPE		-0.8		+3	mA
	Common Voltage TPC+/TPC- TPD+/TPD- TPE			2.5		V

Serial Port Timing

Refer to Figure 16.

Symbol	Parameter	Test Conditions	Min.	Nom.	Max.	Unit
t_C	SCLK Data Clock Period,		80			ns
t_{CKL}	SCLK Low time	SCLK < 0.8V	30			ns
t_{CKH}	SCLK High time	SCLK > 2.0V	30			ns
t_{SENS}	Enable to SCLK		40			ns
t_{SENH}	SCLK to disable		40			ns
t_{DS}	Data set-up time		15			ns
t_{DH}	Data hold time		15			ns
t_{SL}	SDEN min. Low time		160			ns

AGC Characteristics

Unless otherwise specified, recommended operating conditions apply.

AGC AMPLIFIER

The input signals are AC coupled to VIA+ and VIA-. Integrating capacitor C_{BYP} = 1000 pF, is connected between BYP and VPA. Integrating capacitor C_{BYPS} = 1000 pF, is connected between BYPS and VPA. Unless otherwise specified, the output is measured differentially at TPC+ and TPC-, Fin = 5 MHz, the filter frequency fc = max and the filter boost = 0 dB. All specifications apply equally to servo and read mode prior to SFC.

Symbol	Parameter	Test Conditions	Min.	Nom.	Max.	Unit
	Input range	Filter Boost =0 dB @ fc 4 MHz ≤ fc ≤ 34 MHz, Fin = fc	20		250	mVppd
	Input range	Filter Boost =11 dB @ fc 9 MHz ≤ fc ≤ 34 MHz, Fin = fc	20		200	mVppd
ON	ON± voltage measured @ TPC±	VIA = 20 to 250 mVppd 1,1,-1,-1,--- pattern DP/DN output selected 5 MHz < fc < 34 MHz, Fin = fc Boost = 0 to 13 dB	1.19	1.40	1.61	Vppd
DP/DN	Voltage variation	20mVppd < VIA < 250mVppd			5.0	%
	Gain range		3		64	V/V
	Gain sensitivity	BYP or BYPS voltage change		38		dB/V
R_{in}	Differential input resistance	LOWZ = Low, LZTC = Low LOWZ = Low, LZTC = High LOWZ = High, LZTC = x	5.9 1.7 450	7.6 2.7 634	8.9 4.0 850	kΩ kΩ Ω
	Single-ended input resistance	LOWZ = Low, LZTC = Low LOWZ = Low, LZTC = High LOWZ = High, LZTC = x		3.8 1.4 317		kΩ kΩ Ω
V_{OO}	Output offset change	From gain = 3 V/V to 64 V/V With DC cancellation off			200	mV
e_{in}	Input noise voltage	Fixed Gain = 24 dB, Rs = 0 Ω		15	30	nV/√Hz
CMRR	Common mode rejection	Fixed Gain = 24 dB, Rs = 0 Ω	40			dB
PSRR	Power supply rejection	Fixed Gain = 24 dB, Rs = 0 Ω	45			dB

AGC Control Section

The input signals are DC coupled into TPC± with TPC± selected as inputs.

Symbol	Parameter	Test Conditions	Min.	Nom.	Max.	Unit
TPC+/ TPC-, TPD+/ TPD-	Common Mode Input Voltage	For test only		VPA-1.5		V
I_D	Decay current Normal	FASTREC = Low, SG = Low DR = Data Rate Register 37 ≤ DR ≤ 127		-24.5		µA
	Servo Mode Decay current Normal	FASTREC = Low, SG = High TPC+ = TPC-		-24.5		µA
I_{DFR}	Fast Decay Current	FASTREC = High TPC+ = TPC-		8 * I_D		A
I_{CH}	Normal Attack Current	|TPC+ - TPC-| = 0.7875V FASTREC = Low		-17 * I_D		A
I_{CHF}	Fast Attack Current	|TPC+ - TPC-| ≥ 1.09V FASTREC = Low		-143 * I_D		A
I_{CHFR}	Fast Recovery Attack Current	|TPC+ - TPC-| = 0.7875V FASTREC = High		-64 * I_D		A
	Sample Data AGC Peak Charge and Discharge Currents	0 ≤ AGC ≤ 3 AGC = AGC1-0 DR = data rate register 37 ≤ DR ≤127, RR(kΩ)		+/-2.66 * 10^{-6} * AGC * DR/RR		A
BYP	Pin Leakage Current	$\overline{HOLD}$ = Low, V_{BYP} = VRC	-70		+50	nA
BYPS	Pin Leakage Current	$\overline{HOLD}$ = Low, V_{BYPS} = VRC	-70		+50	nA
VRC	Reference Voltage	-100 µA ≤ Io ≤ +500 µA	VPA - 2.56		VPA - 2.1	V

Pulse Qualifier Characteristics

Unless otherwise specified, a 100 mVpp sine wave at 15 MHz is AC coupled into VIA±. FC = 127, and FB = 0.

DUAL LEVEL QUALIFIER

See above for input conditions unless otherwise specified.

Symbol	Parameter	Test Conditions	Min.	Nom.	Max.	Unit
L_{th}	Data Level Threshold	Prior to SFC L_{th} (mV) = 10.47 * LD 16 ≤ LD ≤ 63	L_{th} -11%	L_{th}	L_{th} +11%	V
		After SFC ALE = 0 L_{th} (mV) = 7.44 * LD ALE = 1 L_{th} (mV) = 1.574 * LD 16 ≤ LS ≤ 63	L_{th} -11%	L_{th}	L_{th} +11%	V
LS_{th}	Servo Level Threshold	LS_{th} (mV) = 10.47 * LS 16 ≤ LS ≤ 63	LS_{th} -11%	LS_{th}	LS_{th} +11%	V
	RDS/$\overline{RDS}$ pulse width High voltage	RDSPW = 0	7.7	15	20	ns
		RDSPW = 1	16.8	27	35	ns

DUAL LEVEL QUALIFIER (Continued)

Symbol	Parameter	Test Conditions	Min.	Nom.	Max.	Unit
	PPOL to RDS/$\overline{RDS}$ delay time	PPOL Edge to RDS/$\overline{RDS}$ rise/fall, measured at 1.5V crossing	2.5		12	ns
	PPOL, RDS/$\overline{RDS}$ Rise time	15 pF load, 0.8 to 2.4V			8	ns
	PPOL, RDS/$\overline{RDS}$ Fall time	15 pF load, 2.4 to 0.8V			6	ns
	Pulse pairing	Window and Hysteresis LS_{th} = 50%. Measured at the rising/falling edge of RDS/$\overline{RDS}$ Fin = 5 MHz, FCS = 30	-2.5		+2.5	ns

VITERBI QUALIFIER

See General for input conditions unless otherwise specified.

Symbol	Parameter	Test Conditions	Min.	Nom.	Max.	Unit
V_{th}	Viterbi threshold voltage	V_{th} (mV) = 7.874 * VD 45 ≤ VD ≤ 127	V_{th} - 11%	V_{th}	V_{th}+11%	V

EQUALIZATION QUALITY FACTOR

Unless otherwise specified, measured at ATO pin loaded with 5 pF. VIA± input signal has no asymmetry. Measured after training sequences. Continuous Training pattern with zeros displaced by ±10% of one's magnitude of 500 mV

Symbol	Parameter	Test Conditions	Min.	Nom.	Max.	Unit
	Reference Voltage	No pulse asymmetry ATOSEL1-0 = 00	Typ.-130mV	MAXREF/2	Typ.+130mV	V
	Gain	Absolute deviation of zeros is multiplied by gain		600		mV
	Drift			0.2		mV/µs

AMPLITUDE ASYMMETRY QUALITY FACTOR

Unless otherwise specified, measured at ATO pin loaded with 5 pF. VIA± input signal has 10% amplitude asymmetry. Asymmetry (%) = $((V_{+1}-V_{-1})/(V_{+1}+V_{-1}))$ * 100, where V_{+1} = positive "1" sample value and V_{-1} = negative "1" sample value. This is measured with continuous training bytes, 93H, with distance between canceled and non-canceled zeros at 10 % of one's magnitude of 500 mV or 100 mV.

Symbol	Parameter	Test Conditions	Min.	Nom.	Max.	Unit
	Reference Voltage	ATOSEL1-0 = 00	Typ.-100mV	MAXREF/2	Typ.+100mV	V
	Qasym at ATO			400		mV

INTERNAL AC COUPLER CHARACTERISTICS

Unless otherwise specified, Measured at TPC+/TPC- and TPD+/TPD- pins loaded with 5 pF.

Symbol	Parameter	Test Conditions	Min.	Nom.	Max.	Unit
	Offset voltage	ACCPL = 0	-35		+35	mV
	LOWZ Time Constant	LOWZ = 1, LZCTR = X		0.3		µs
	Non LOWZ Time Constant	LOWZ = 0, LZCTR = 0		5		µs
		LOWZ = 0, LZCTR = 1		1.5		µs

ATO Buffer Characteristics

Unless otherwise specified, measured at ATO pin loaded with 5 pF. VIA± input signal has no asymmetry.

Symbol	Parameter	Test Conditions	Min.	Nom.	Max.	Unit
	Reference voltage	ATOSEL 1-0 = 00	Typ. - 100	MAXREF/2	Typ. +100	V
	Swing	From Reference Voltage	-0.6		+0.6	V
	Source Impedance			50		Ω
	Drive Capability	+/- refers to source/sink	+2/-2	+5/-3		mA

Programmable Filter Characteristics

Unless otherwise specified, recommended operating conditions apply. The input signals are AC coupled to VIA+ and VIA-. All specifications identical for identical data and servo register settings.

Data uses C_{BYP} from BYP to VPA and servo uses C_{BYPS} from BYPS to VPA.

Symbol	Parameter	Test Condition	Min.	Nom.	Max.	Unit
$f$cr	Filter cutoff range	fc (MHz) = 0.301 * FC - 1.142 44 ≤ FC ≤ 117 fc (MHz) = 0.277 * FCS - 0.08 14 ≤ FC ≤ 43 0 dB Boost		4-34		MHz
$f$ca	Filter fc Accuracy	44 ≤ FC ≤ 117 14 ≤ FC ≤ 43	-15 -20		+15 +20	%
	OD gain to ON gain mismatch	$f$in = 0.67 * fc 0 dB Boost Mismatch = $\frac{ODgain - ONgain}{ONgain} \times 100\%$	-30		+30	%
	Boost @ Fc	Boost (dB) = 20 * log [0.021848 * FB + 0.000046 * FB * FC +1]	0		13	dB
	Boost accuracy	Boost = 13 dB	-2.0		+2.0	dB
		Boost = 9 dB	-1.7		+1.7	dB
	Filter Output Dynamic Range ON±	THD = 2.5%, $f$in = 0.67 * fc, C_L = 15 pF	1.4			Vpp

Programmable Filter Characteristics (Continued)

Symbol	Parameter	Test Condition	Min.	Nom.	Max.	Unit
	TGD Variation	fc = 34 MHz Fin = 0.3fc to fc 0 ≤ FB ≤ 127	-700		+700	ps
		fc = 12 MHz to 34 MHz Fin =0.3 fc to fc 0 ≤ FB ≤ 127	-5		-5	ps
		fc = 4 MHz to 12 MHz Fin = 0.2fc to fc 0 ≤ FB ≤ 127	-5		-5	ps
		fc = 12 MHz to 34 MHz Fin = fc to 1.75fc 0 ≤ FB ≤ 127	-6		-6	ps
		fc = 4 MHz to 12 MHz Fin = fc to 1.75fc 0 ≤ FB ≤ 127	-6		+6	ps
	Group delay equalization accuracy	Fc = 12-34 MHz, FB = 0 db % GD = (0.9783 * FGB) - 0.665			+5	%
	ON+ - ON- output noise voltage, no boost	BW=100 MHz, Rs=50 Ω fc = 34 MHz, boost = 0 dB AGC gain = 24 dB fixed		3.7		mV rms
	ON+ - ON- output noise voltage, max. boost	BW=100 MHz, Rs=50 Ω fc = 34 MHz; FB = 127 AGC gain = 24 dB fixed		6.8		mV rms
VRX	Rx pin voltage	T_{amb} = 27°C T_{amb} = 125°C		600 800		mV mV
	Rx resistance	1% fixed value		10.0		kΩ

Transversal Filter Characteristics

Symbol	Parameter	Test Conditions	Min.	Nom.	Max.	Unit
	Km1 Range		±0.15	±0.2		V/V
	Km1 Gain Drift	EQHOLD = 1 Hold time ≤ 1 ms		0.015	0.05	V/V/ms
	Km2 Range		-0.15		+0.13125	
	Km2 Resolution			0.01875		
	Km2 Accuracy			±5	±20	%

Note: Km1 and the equalizer control voltage at TPA+ - TPA- is approximately related by Km1 = 0.009 * Data Rate (Mbit/s) * (TPA+ - TPA-).

Time Base Generator Characteristics

RR = 10.0 kΩ to GND for 125 Mbit/s max. operation, and 12.1 kΩ for 100 Mbit/s max. operation

Symbol	Parameter	Test Conditions	Min.	Nom.	Max.	Unit
	FREF input range	Control Operating Register BT bit = 0	6		25	MHz
		Control Operating Register BT bit = 1 and Control Test Register EFR bit =1			141	MHz
	FREF input pulse width	Control Operating Register BT bit = 0	10			ns
		Control Operating Register BT bit = 1 and Control Test Register EFR bit =1	3			ns
	F_{TBG} frequency range		47		141	MHz
	F_{TBG} jitter	> 10K samples		30	200	ps_{RMS}
	M counter range		2		255	
	N counter range		2		127	
F_{TBG}	VCO center frequency	FLTR1+ - FLTR1- = 0V F_{TBG} =[(1.143 * DR) + 4.986] MHz RR = 10.0 kΩ	0.80 * F_{TBG}		1.20 * F_{TBG}	MHz
	VCO dynamic range	-2.0V ≤ FLTR1+ - FLTR1- ≤ +2.0V F_{TBG} = 80 MHz	±25			%
KVCO	VCO control gain	ωi =2π * F_{TBG} -2.0V ≤ FLTR1+ - FLTR1- ≤ 2.0V	0.12 * ωi	0.18* ωi	0.24 * ωi	rad/(V.s)
KD	Phase detector gain	KD = (2.088 * DR) + 3.442 RR = 10 kΩ	0.72 * KD		1.22 * KD	µA/rad
	KVCO * KD product accuracy		-28		+28	%

DATA SEPARATOR CHARACTERISTICS

Unless otherwise specified, recommended operating conditions apply.

Read Mode - Byte-Wide (Refer to Fig. 19)

Symbol	Parameter	Test Conditions	Min.	Nom.	Max.	Unit
t_{RRC}	Read clock rise time	0.8V to 2.4V $C_L \leq 15$ pF			10	ns
t_{FRC}	Read clock fall time	2.4V to 0.8V $C_L \leq 15$ pF			10	ns
t_{RD}	RCLK pulse width	Except during re-sync	$4/9t_{ORC}$-5		$4/9t_{ORC}$+5	ns
t_{DC1}	RCLK re-sync period at SFC and RG falling edge	Measured from rising edge to rising edge of RCLK	t_{ORC}		t_{ORC}+2TC	ns
t_{DC2}	RCLK re-sync period at code boundary detect	Measured from rising edge to rising edge of RCLK	t_{ORC}		$2t_{ORC}$	ns
t_{NS}, t_{NH}	NRZx out set-up and hold time		20			ns

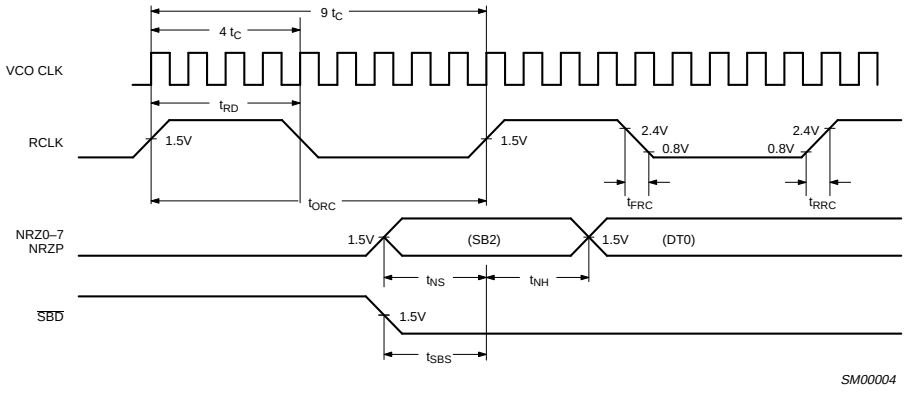

Figure 19: Byte-Wide Read Timing

Write Mode - Byte-Wide (Refer to Fig. 20)

Symbol	Parameter	Test Conditions	Min.	Typ.	Nom.	Unit
t_{RWC}	Write clock rise time	0.8 to 2.0 V $C_L \leq 15$ pF			10	ns
t_{FWC}	Write clock fall time	2.0 to 0.8 V $C_L \leq 15$ pF			8	ns
t_{SNRZ}	NRZx set-up time		10			ns
t_{HNRZ}	NRZx hold time		3			ns

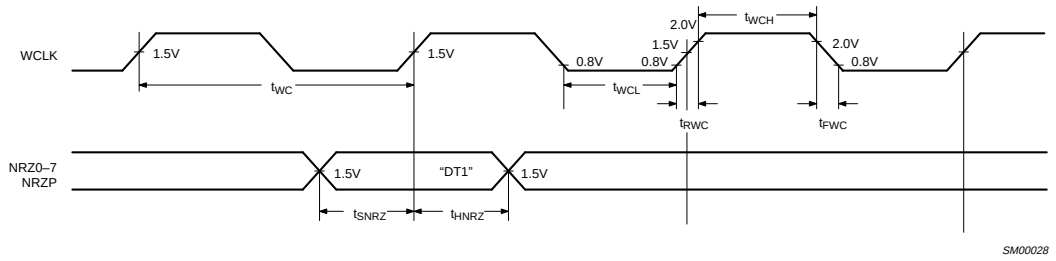

Figure 20: Write Mode NRZ Interface Timing (byte-wide and nibble modes)

Write Data Output (Refer to Fig. 21)

Symbol	Parameter	Test Conditions	Min.	Typ.	Max.	Unit
t_{WD}	Write data output position accuracy	Write precomp = 0, $C_L < 15$ pF, $T_{TBG} = 1/F_{TBG}$	T_{TBG} - 0.5		T_{TBG} + 0.5	ns
t_{RWD}	Write data output rise time	20% to 80% points			3	ns
t_{FWD}	Write data output fall time	80% to 20% points			3	ns

Read Mode - Nibble

Symbol	Parameter	Test Conditions	Min.	Nom.	Max.	Unit
t_{RCL}	RCLK Low time	$C_L \leq 15$ pF	5			ns
t_{RCH}	RCLK High time	$C_L \leq 15$ pF	5			ns
t_{RRC}	Read clock rise time	0.8V to 2.4V $C_L \leq 15$ pF			8	ns
t_{FRC}	Read clock fall time	2.4V to 0.8V $C_L \leq 15$ pF			6	ns
t_{NS}, t_{NH}	NRZx out set-up and hold time		5.6			ns

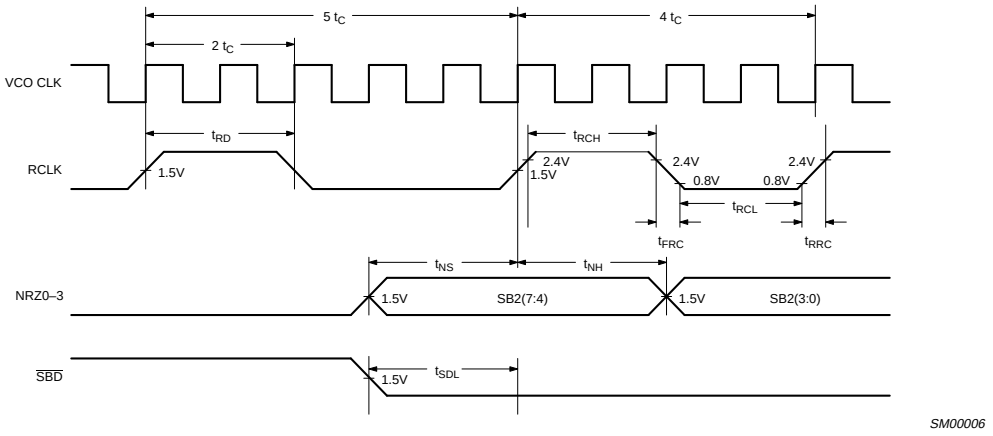

Figure 21: Nibble Read Timing

Write Mode - Nibble (Refer to Fig. 20)

Symbol	Parameter	Test Conditions	Min.	Nom.	Max.	Unit
t_{WC}	WCLK period	$C_L \leq 15$ pF	24			ns
t_{WCL}	WCLK Low time	$C_L \leq 15$ pF	5			ns
t_{WCH}	WCLK High time	$C_L \leq 15$ pF	5			ns
t_{RWC}	Write clock rise time	0.8 to 2.0 V $C_L \leq 15$ pF			10	ns
t_{FWC}	Write clock fall time	2.0 to 0.8 V $C_L \leq 15$ pF			8	ns
t_{SNRZ}	NRZx set-up time		8			ns
t_{HNRZ}	NRZx hold time		3			ns

Write Precompensation

Symbol	Parameter	Test Conditions	Min.	Nom.	Max.	Unit
TPC	Write precomp time shift as a percentage of T_{TBG}	TPC = 2.1 * WPC $0 \leq$ WPC ≤ 15	0.7 * TPC - 0.5		1.3 * TPC + 0.5	%

Data Synchronizer PLL

Symbol	Parameter	Test Conditions	Min.	Nom.	Max.	Unit
FVCO	VCO center frequency	FLTR2+ - FLTR2- = 0V FVCO = [(1.115 * DR) + 3.576] MHz RR = 10.0 kΩ	0.8 * FVCO		1.2 * FVCO	ns
	VCO dynamic range in each direction	-2.0V ≤ FLTR2+ - FLTR2- ≤ +2.0V	±25			%
	VCO control gain and M, M * KVCO	ωi = 2π/FVCO M = 4.32 * (DR/127) RR = 10.0 kΩ -0.25V ≤ FLTR2+ - FLTR2- ≤ +0.25V	0.11 * ωi * M		0.29 * ωi * M	rad/(V-S)
	Charge Pump Transconductance	Gm = 350 µA/V during synchronization	0.6 * Gm		1.4 * Gm	A/V
KDI	Idle Mode Phase Detector Gain	KDI = 0.15 Gm * M RR = 10.0 kΩ		KDI		µA/rad
	Gm * M * KVCO product accuracy		-28		+28	%
	A * KVCO product accuracy	A= 0.8 * (DRC/127)	-30		+30	%

Servo Characteristics

Unless otherwise specified input is 10 MHz sine wave into DP/DN inputs, TPC/D1-0 = 01.

Symbol	Parameter	Test Conditions	Min.	Nom.	Max.	Unit
	MAXREF output voltage	I_{SOURCE} = 0 mA	3.06	3.28	3.48	V
	SERVO GAIN, (SEROUT - SREF)	Fin = 10 MHz, SG = 1, Input signal at TPC/$\overline{TPC}$ of 0.7 and 1.4 Vp-pd	0.5	0.6	0.7	V/Vp-pd
	200 mV REFERENCE, Change in SEROUT when SELVRC is toggled	SG = 0	195	215	235	mV
	SEROUT OFFSET, (SEROUT - SREF)	SG = 0, SELVRC = 1	0	15	55	mV
	SREF OUTPUT VOLTAGE	Load current = 1 mA, T = junction temperature in deg C		VPA - 3.2 + 2 mV*T		V
	SEROUT PULL DOWN CURRENT	$\overline{SDIEN}$ = 0, SEROUT = VPA - 2.3V		435		µA
	SREF PULL DOWN CURRENT	$\overline{SDIEN}$ = 0, SEROUT = VPA - 2.3V		445		µA

DAC Differential Non-Linearity

Monitor the output of each DAC and measure the DNL.

Symbol	Parameter	Test Conditions	Min.	Nom.	Max.	Unit
	Fc DAC DNL	Filter cutoff DAC			±1	lsb
	FB DAC DNL	Filter Boost DAC			±1	lsb
	VDT DAC DNL	Viterbi Threshold DAC			±1	lsb
	LDP DAC DNL	Level Positive Threshold DAC			±1	lsb
	LDN DAC DNL	Level Negative Threshold DAC			±1	lsb
	DR DAC DNL	Data Rate DAC			±1	lsb
	WP DAC DNL	Write Precomp DAC			±1	lsb
	DRC DAC DNL	Damping Ratio Control DAC			±1	lsb

P32P4911A Pinout
100 LQFP

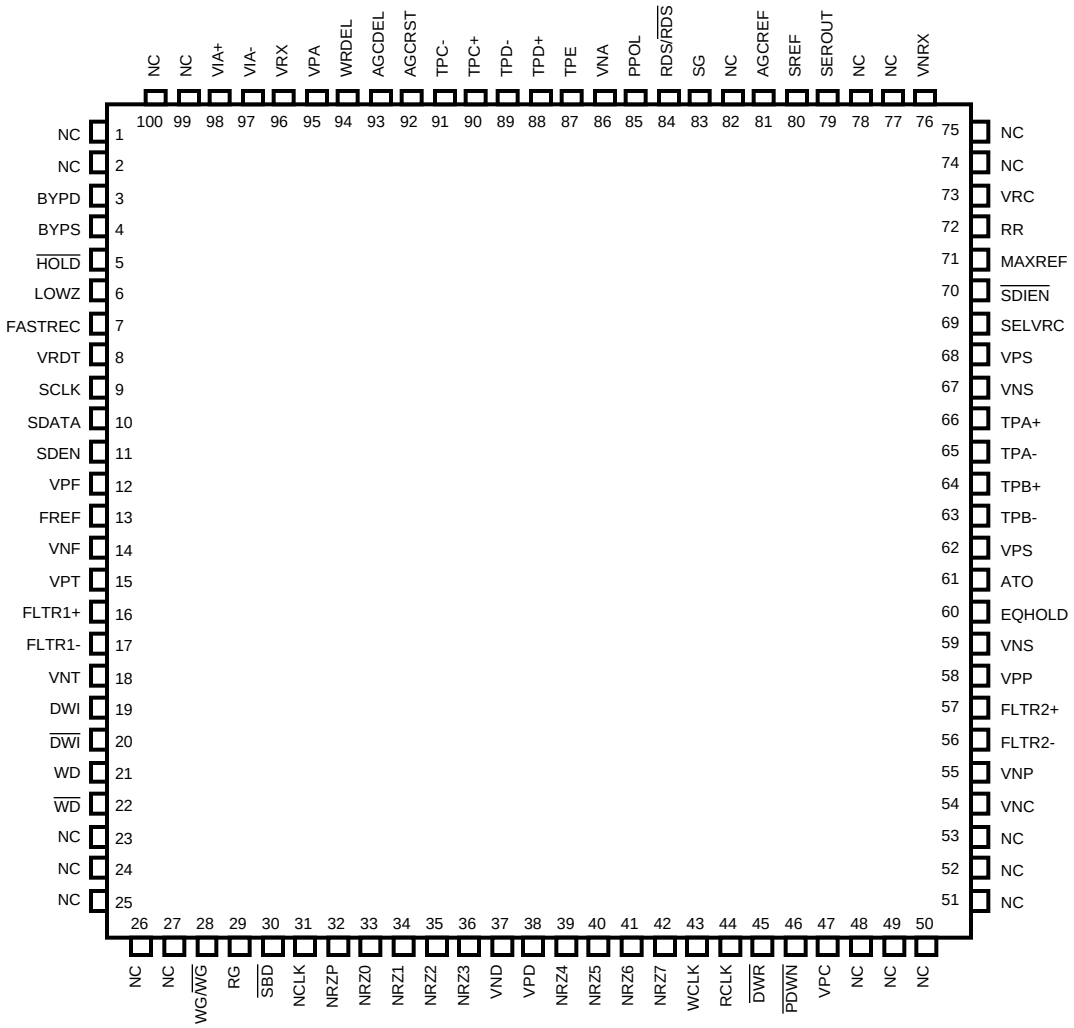

LQFP100: plastic low profile quad flat package; 100 leads; body 14 x 14 x 1.4 mm **SOT407-1**

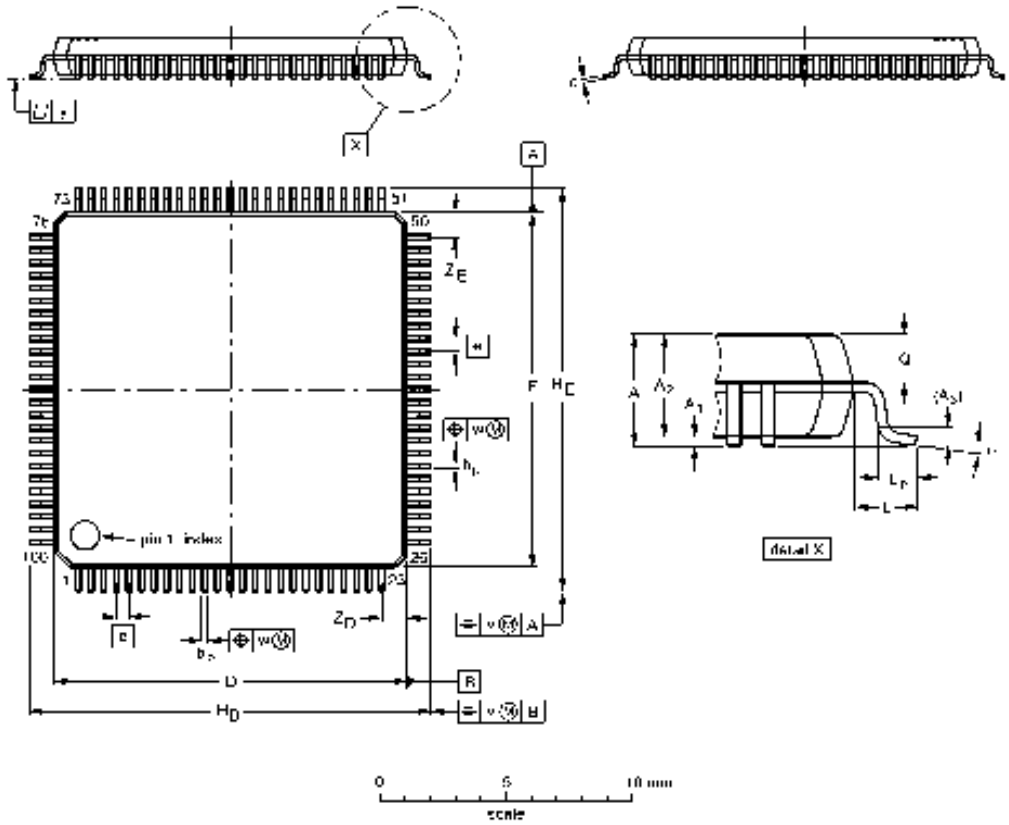

DIMENSIONS (mm are the original dimensions)

UNIT	A max.	A_1	A_2	A_3	b_p	c	D(1)	E(1)	e	H_D	H_E	L	L_p	Q	v	w	y	Z_D(1)	Z_E(1)	θ
mm	1.6	0.20 0.05	1.5 1.3	0.25	0.26 0.16	0.18 0.12	14.1 13.9	14.1 13.9	0.5	15.85 15.75	15.85 15.75	1.0	0.75 0.45	0.70 0.57	0.2	0.12	0.1	1.15 0.85	1.15 0.85	7° 0°

Note

1. Plastic or metal protrusions of 0.25 mm maximum per side are not included.

OUTLINE VERSION	REFERENCES				EUROPEAN PROJECTION	ISSUE DATE
	IEC	JEDEC	EIAJ			
SOT407-1						95-08-04

Figure 22: Package Diagram

DEFINITIONS		
Data Sheet Identification	**Product Status**	**Definition**
Objective Specification	Formative or in Design	This data sheet contains the design target or goal specifications for product development. Specifications may change in any manner without notice.
Preliminary Specification	Preproduction Product	This data sheet contains preliminary data, and supplementary data will be published at a later date. Philips Semiconductors reserves the right to make changes at any time without notice in order to improve design and supply the best possible product.
Product Specification	Full Production	This data sheet contains Final Specifications. Philips Semiconductors reserves the right to make changes at any time without notice, in order to improve design and supply the best possible product.

Philips Semiconductors and Philips Electronics North America Corporation reserve the right to make changes, without notice, in the products, including circuits, standard cells, and/or software, described or contained herein in order to improve design and/or performance. Philips Semiconductors assumes no responsibility or liability for the use of any of these products, conveys no license or title under any patent, copyright, or mask work right to these products, and makes no representations or warranties that these products are free from patent, copyright, or mask work right infringement, unless otherwise specified. Applications that are described herein for any of these products are for illustrative purposes only. Philips Semiconductors makes no representation or warranty that such applications will be suitable for the specified use without further testing or modification.

LIFE SUPPORT APPLICATIONS
Philips Semiconductors and Philips Electronics North America Corporation Products are not designed for use in life support appliances, devices, or systems where malfunction of a Philips Semiconductors and Philips Electronics North America Corporation Product can reasonably be expected to result in a personal injury. Philips Semiconductors and Philips Corporation Product can reasonably be expected to result in a personal injury. Philips Semiconductors and Philips Electronics of North America Corporation customers using or selling Philips Semiconductors and Philips Electronics North America Corporation Products for use in such applications do so at their own risk and agree to fully indemnify Philips Semiconductors and Philips Electronics of North America Corporation for any damages resulting from such improper use or sale.

Philips Semiconductors
811 East Arques Avenue
P.O. Box 3409
Sunnyvale, California 94088-3409
Telephone 800-234-7381

Philips Semiconductors and Philips Electronics North America Corporation register eligible circuits under the Semiconductor Chip Protection Act.
© Copyright Philips Electronics North America Corporation 1996
All rights reserved. Printed in U.S.A.

Philips Semiconductors – a worldwide company

Argentina: see South America

Australia: 34 Waterloo Road, NORTH RYDE, NSW 2113, Tel. +61 2 9805 4455, Fax. +61 2 9805 4466

Austria: Computerstr. 6, A-1101 WIEN, P.O. Box 213, Tel. +43 1 60 101, Fax. +43 1 60 101 1210

Belarus: Hotel Minsk Business Center, Bld. 3, r. 1211, Volodarski Str. 6, 220050 MINSK, Tel. +375 172 200 733, Fax. +375 172 200 773

Belgium: see The Netherlands

Brazil: see South America

Bulgaria: Philips Bulgaria Ltd., Energoproject, 15th floor, 51 James Bourchier Blvd., 1407 SOFIA, Tel. +359 2 689 211, Fax. +359 2 689 102

Canada: PHILIPS SEMICONDUCTORS/COMPONENTS, Tel. +1 800 234 7381, Fax. +1 708 296 8556

China/Hong Kong: 501 Hong Kong Industrial Technology Centre, 72 Tat Chee Avenue, Kowloon Tong, HONG KONG, Tel. +852 2319 7888, Fax. +852 2319 7700

Colombia: see South America

Czech Republic: see Austria

Denmark: Prags Boulevard 80, PB 1919, DK-2300 COPENHAGEN S, Tel. +45 32 88 2636, Fax. +45 31 57 1949

Finland: Sinikalliontie 3, FIN-02630 ESPOO, Tel. +358 615 800, Fax. +358 615 80920

France: 4 Rue du Port-aux-Vins, BP317, 92156 SURESNES Cedex, Tel. +33 1 40 99 6161, Fax. +33 1 40 99 6427

Germany: Hammerbrookstraße 69, D-20097 HAMBURG, Tel. +49 40 23 52 60, Fax. +49 40 23 536 300

Greece: No. 15, 25th March Street, GR 17778 TAVROS, Tel. +30 1 4894 339/911, Fax. +30 1 4814 240

Hungary: see Austria

India: Philips INDIA Ltd, Shivsagar Estate, A Block, Dr. Annie Besant Rd. Worli, MUMBAI 400 018, Tel. +91 22 4938 541, Fax. +91 22 4938 722

Indonesia: see Singapore

Ireland: Newstead, Clonskeagh, DUBLIN 14, Tel. +353 1 7640 000, Fax. +353 1 7640 200

Israel: RAPAC Electronics, 7 Kehilat Saloniki St, TEL AVIV 61180, Tel. +972 3 645 0444, Fax. +972 3 648 1007

Italy: PHILIPS SEMICONDUCTORS, Piazza IV Novembre 3, 20124 MILANO, Tel. +39 2 6752 2531, Fax. +39 2 6752 2557

Japan: Philips Bldg 13-37, Kohnan 2-chome, Minato-ku, TOKYO 108, Tel. +81 3 3740 5130, Fax. +81 3 3740 5077

Korea: Philips House, 260-199 Itaewon-dong, Yongsan-ku, SEOUL, Tel. +82 2 709 1412, Fax. +82 2 709 1415

Malaysia: No. 76 Jalan Universiti, 46200 PETALING JAYA, SELANGOR, Tel. +60 3 750 5214, Fax. +60 3 757 4880

Mexico: 5900 Gateway East, Suite 200, EL PASO, TEXAS 79905, Tel. +1 800 234 7381, Fax. +1 708 296 8556

Middle East: see Italy

Netherlands: Postbus 90050, 5600 PB EINDHOVEN, Bldg. VB, Tel. +31 40 27 83749, Fax. +31 40 27 88399

New Zealand: 2 Wagener Place, C.P.O. Box 1041, AUCKLAND, Tel. +64 9 849 4160, Fax. +64 9 849 7811

Norway: Box 1, Manglerud 0612, OSLO, Tel. +47 22 74 8000, Fax. +47 22 74 8341

Philippines: Philips Semiconductors Philippines Inc., 106 Valero St. Salcedo Village, P.O. Box 2108 MCC, MAKATI, Metro MANILA, Tel. +63 2 816 6380, Fax. +63 2 817 3474

Poland: Ul. Lukiska 10, PL 04-123 WARSZAWA, Tel. +48 22 612 2831, Fax. +48 22 612 2327

Portugal: see Spain

Romania: see Italy

Russia: Philips Russia, Ul. Usatcheva 35A, 119048 MOSCOW, Tel. +7 095 926 5361, Fax. +7 095 564 8323

Singapore: Lorong 1, Toa Payoh, SINGAPORE 1231, Tel. +65 350 2538, Fax. +65 251 6500

Slovakia: see Austria

Slovenia: see Italy

South Africa: S.A. PHILIPS Pty Ltd., 195-215 Main Road Martindale, 2092 JOHANNESBURG, P.O. Box 7430 Johannesburg 2000, Tel. +27 11 470 5911, Fax. +27 11 470 5494

South America: Rua do Rocio 220, 5th floor, Suite 51, 04552-903 São Paulo, SÃO PAULO - SP, Brazil, Tel. +55 11 821 2333, Fax. +55 11 829 1849

Spain: Balmes 22, 08007 BARCELONA, Tel. +34 3 301 6312, Fax. +34 3 301 4107

Sweden: Kottbygatan 7, Akalla, S-16485 STOCKHOLM, Tel. +46 8 632 2000, Fax. +46 8 632 2745

Switzerland: Allmendstrasse 140, CH-8027 ZÜRICH, Tel. +41 1 488 2686, Fax. +41 1 481 7730

Taiwan: PHILIPS TAIWAN Ltd., 23-30F, 66, Chung Hsiao West Road, Sec. 1, P.O. Box 22978, TAIPEI 100, Tel. +886 2 382 4443, Fax. +886 2 382 4444

Thailand: PHILIPS ELECTRONICS (THAILAND) Ltd., 209/2 Sanpavuth-Bangna Road Prakanong, BANGKOK 10260, Tel. +66 2 745 4090, Fax. +66 2 398 0793

Turkey: Talatpasa Cad. No. 5, 80640 GÜLTEPE/ISTANBUL, Tel. +90 212 279 2770, Fax. +90 212 282 6707

Ukraine: PHILIPS UKRAINE, 2A Akademika Koroleva str., Office 165, 252148 KIEV, Tel. +380 44 476 0297/1642, Fax. +380 44 476 6991

United Kingdom: Philips Semiconductors Ltd., 276 Bath Road, Hayes, MIDDLESEX UB3 5BX, Tel. +44 181 730 5000, Fax. +44 181 754 8421

United States: 811 East Arques Avenue, SUNNYVALE, CA 94088-3409, Tel. +1 800 234 7381, Fax. +1 708 296 8556

Uruguay: see South America

Vietnam: see Singapore

Yugoslavia: PHILIPS, Trg N. Pasica 5/v, 11000 BEOGRAD, Tel. +381 11 825 344, Fax.+381 11 635 777

For all other countries apply to: Philips Semiconductors, Marketing & Sales Communications, Building BE-p, P.O. Box 218, 5600 MD EINDHOVEN, The Netherlands, Fax. +31 40 27 24825

Internet: http://www.semiconductors.philips.com/ps/

© Philips Electronics N.V. 1996

SCA50

All rights are reserved. Reproduction in whole or in part is prohibited without the prior written consent of the copyright owner.

The information presented in this document does not form part of any quotation or contract, is believed to be accurate and reliable and may be changed without notice. No liability will be accepted by the publisher for any consequence of its use. Publication thereof does not convey nor imply any license under patent- or other industrial or intellectual property rights.

Printed in The Netherlands 647021/1200/01/pp12 Date of release: 1996 Jul 17 Document order number: 9397 750 00971

Let's make things better.

Philips Semiconductors

PHILIPS