Low EMI Peripheral Clock Generator for Notebook & Motherboards

FEATURES

- Single Low EMI IC to replace multiple crystals and oscillators on Notebooks and Motherboards (27MHz, 10MHz, 14.318MHz, 8MHz, 12MHz, 24.576MHz, 25MHz).
- Selectable crystal input: 24.576MHz or 14.318MHz (accuracy requirement +/- 20ppm)
- Less than 10ppm Frequency Synthesis error, meeting AC97, IEEE1394, IEEE802 and USB2.0 frequency precision specification.
- 27MHz clock with 5 levels of Selectable Spread Spectrum modulation form +/- 0.5% to +/- 1.5% center.
- 25MHz clock with double drive strength (Ethernet PHY and MAC).
- 24.576MHz clocks for Audio Codec and IEEE1394.
- 12MHz for USB 2.0.
- Selectable 10MHz and 8MHz for Keyboard controller.
- Dual power source selection for 24.576MHz, 10MHz, and 12MHz.
- Available in 16-Pin SOIC or TSSOP.

Table 1. SPREAD SPECTRUM SELECTION

SST1	SST0	SST Modulation only on 27MHz. (pin 15)
1	1	+/- 1.5 %
1	0	+/- 1.25 %
1	M	+/- 1 %
0	1	+/- 0.75 %
0	0	+/- 0.5 %
0	M	SST OFF (Default)

Notes: M = Do not connect. 1 = Pulled up. 0 = Pulled down.

Table 2. POWER SELECTION TABLE

VDD_SEL	24.576MHz (pin 7)	12MHz (pin 12)
0	VDDB1	VDDB2
1	VDD25M	VDD25M

PIN ASSIGNMENT

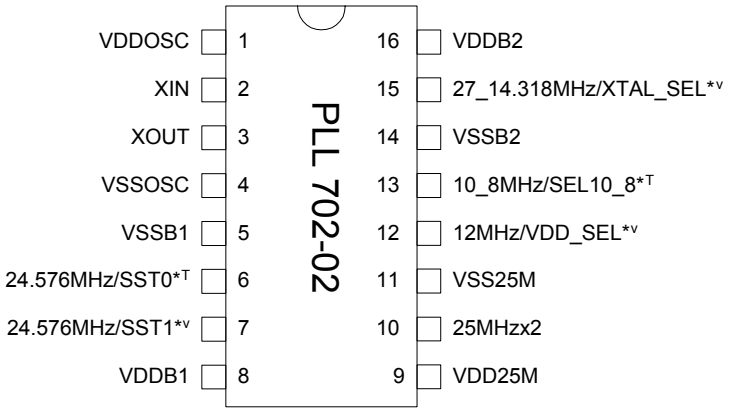

Note: 25MHzx2: double drive strength
v: Internal pull-down resistor (120kΩ)
*: Bi-directional pin
T: Tri-level input

POWER GROUPS

- VDDOSC – VSSOSC: XIN, XOUT, analog core and digital part.
- VDDB1 – VSSB1: 24.576MHz.
- VDDB2 – VSSB2: 27MHz, 10_8MHz, and 12MHz.
- VDD25M – VSS25M: 25MHz, (10_8MHz, 12MHz, 24.576MHz when power VDDB1, VDDB2 not present).

Table 3. FREQUENCY SELECTION TABLE

SEL10_8	10_8MHz (pin 13)	
	Power Source	Output Frequency
M	VDD25M	8MHz
1	VDDB2	10MHz
0	OFF	-

Table 4. CRYSTAL SELECTION TABLE

Crystal Input	XTAL_SEL
24.576MHz	0
14.318MHz	1

BLOCK DIAGRAM

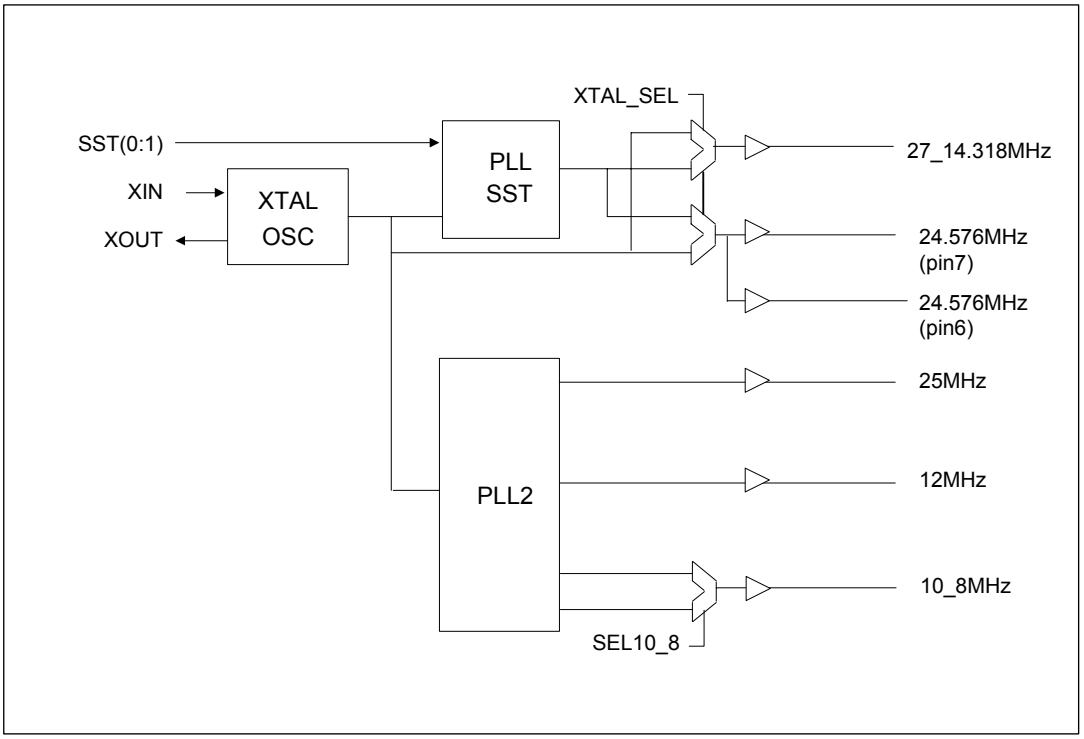

Note 1: In order to use VDD25M as power source for 10_8MHz (pin 13), 24.576MHz (pin 7), and 12MHz (pin 12), it is necessary to select this feature through the VDD_SEL and SEL10_8M inputs (see Power Selection and 10_8MHz Frequency Selection Tables on p.1).

Note 2: Only 27MHz output is modulated for low EMI via Spread Spectrum.

PIN DESCRIPTIONS

Name	Pin#	Type	Description
VDDOSC	1	P	3.3V power supply for oscillator, analog core and digital circuitry.
XIN	2	I	Crystal input: accepts either 24.576MHz or 14.31818MHz fundamental crystal (CL = 20pF, parallel resonant mode, +/-20ppm). On-chip load capacitors: no external load capacitors required. (See the table #4)
XOUT	3	O	Crystal output.
VSSOSC	4	P	Ground connection.
VSSB1	5	P	Ground connection.
24.576MHz/SST0	6	B	Bi-directional and Tri-Level pin. Upon power-on, the value of SST0 is latched in and used to select the SST control (see Spread Spectrum selection table 1). Tri level input: M = Do not connect, 1 = Pull up, 0 = Pull down. After power-up this pin acts as 24.576MHz output clock.
24.576MHz/SST1	7	B	Bi-directional pin. Upon power-on, the value of SST1 is latched in and used to select the SST control (see Spread Spectrum selection table 1). Internal pull down defaults SST1 to 0, use external pull-up to set to 1. After power-up this pin acts as 24.576MHz output clock.
VDDB1	8	P	3.3V power supply for 24.576MHz clock.
VDD25M	9	P	3.3V power supply for 25MHz, 10_8MHz, 12MHz, 24.576MHz.
25MHzx2	10	O	25MHz Ethernet output clock (double drive strength).
VSS25M	11	P	Ground connection.
12MHz/VDD_SEL	12	B	Bi-directional pin. Upon power-on, the value of VDD_SEL is latched in and used to select the power (see Power Selection table 2). Internal pull down defaults SST1 to 0, use external pull-up to set to 1. After power-up this pin acts as 12MHz output clock.
10_8MHz/SEL10_8	13	B	Bi-directional and Tri-level pin. Upon power-on, the value of SEL10_8 is latched in and used to select the output frequency (See frequency selection table 3). Tri level input: M = Do not connect, 1 = Pull up, 0 = Pull down. After power-up this pin acts as 10MHz clock, 8MHz clock, or "No output", depending on SEL10_8.
VSSB2	14	P	Ground connection.
27_14.318MHz/XTAL_SEL	15	B	Bi-directional pin. Upon power-on, the value of XTAL_SEL is latched in and used to set the input crystal frequency (24.575MHz or 14.31818MHz). Set XTAL_SEL to 0 (default) for 24.576MHz input crystal, set XTAL_SEL to 1 for 14.31818MHz input crystal (see Crystal Selection Table on page 1). . After power-up this pin acts as 27MHz output (with 24.576MHz crystal) or as 14.31818MHz pass through clock (with 14.31818MHz crystal), depending on the input crystal. The 27MHz output can be modulated for low EMI using Spread Spectrum.
VDDB2	16	P	3.3V power supply for 27MHz, 10MHz, 12MHz, and 24.576MHz.

FUNCTIONAL DESCRIPTION

Tri-level and two-level inputs

In order to reduce pin usage, the PLL702-02 uses tri-level input pins. These pins allow 3 levels for input selection: namely, 0 = Connect to GND, 1 = Connect to VDD, M = Do not connect. Thus, unlike the two-level selection pins, the tri-level input pins are in the "M" (mid) state when not connected. In order to connect a tri-level pin to a logical "zero", the pin must be connected to GND. Likewise, in order to connect to a logical "one", the pin must be connected to VDD.

Connecting a bi-directional pin

The PLL702-02 also uses bi-directional pins. The same pin serves as input upon power-up, and as output as soon as the inputs have been latched. The value of the input is latched-in upon power-up. Depending on the pin (see pin description), the input can be tri-level or a standard two-level. Unlike unidirectional pins, bi-directional pins cannot be connected directly to GND or VDD in order to set the input to "0" or "1", since the pin also needs to serve as output. In the case of two level input pins, an internal pull-up resistor is present. This allows a default value to be set when no external pull down resistor is connected between the pin and GND (by definition, a tri-level input has a the default value of "M" (mid) if it is not connected). In order to connect a bi-directional pin to a non-default value, the input must be connected to GND or VDD through an external pull-down/pull-up resistor.

Note: *when the output load presents a low impedance in comparison to the internal pull-up resistor, the internal pull-up resistor may not be sufficient to pull the input up to a logical "one", and an external pull-up resistor may be required.*
For bi-directional inputs, the external loading resistor between the pin and GND has to be sufficiently small (compared to the internal pull-up resistor) so that the pin voltage be pulled below 0.8V (logical "zero"). In order to avoid loading effects when the pin serves as output, the value of the external pull-down resistor should however be kept as large as possible. In general, it is recommended to use an external resistor of around one sixth to one quarter of the internal pull-up resistor (see Application Diagram).
Note: *when the output is used to drive a load presenting an small resistance between the output pin and VDD, this resistance is in essence connected in parallel to the internal pull-up resistor. In such a case, the external pull-down resistor may have to be dimensioned smaller to guarantee that the pin voltage will be low enough achieve the desired logical "zero". This is particularly true when driving 74FXX TTL components.*

APPLICATION DIAGRAM: BI-DIRECTIONAL PINS WITH INTERNAL PULL-UP

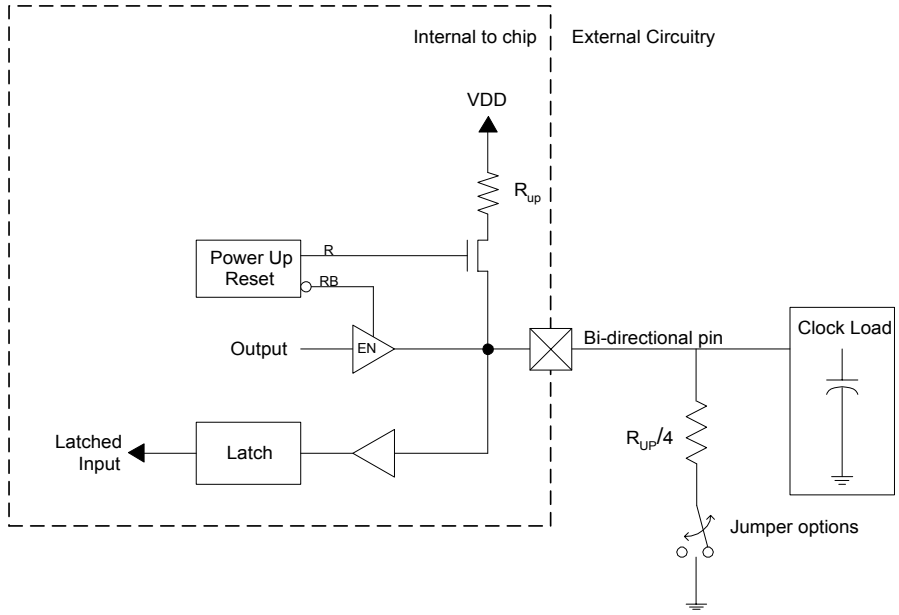

NOTE: Rup=Internal pull-up resistor (see pin description). Power-up Reset : R starts from 1 to 0 while RB starts from 0 to 1.

Electrical Specifications

1. Absolute Maximum Ratings

PARAMETERS	SYMBOL	MIN.	MAX.	UNITS
Supply Voltage	V_{DD}		4.6	V
Input Voltage, dc	V_I	-0.5	V_{DD}+0.5	V
Output Voltage, dc	V_O	-0.5	V_{DD}+0.5	V
Storage Temperature	T_S	-65	150	°C
Ambient Operating Temperature*	T_A	-40	85	°C
Junction Temperature	T_J		125	°C
Lead Temperature (soldering, 10s)			260	°C
ESD Protection, Human Body Model			2	kV

Exposure of the device under conditions beyond the limits specified by Maximum Ratings for extended periods may cause permanent damage to the device and affect product reliability. These conditions represent a stress rating only, and functional operations of the device at these or any other conditions above the operational limits noted in this specification is not implied.

* **Note**: Operating Temperature is guaranteed by design for all parts (COMMERCIAL and INDUSTRIAL), but tested for COMMERCIAL grade only.

2. AC Specifications

PARAMETERS	CONDITIONS	MIN.	TYP.	MAX.	UNITS
Input Frequency (to be set via XTAL_SEL)	+/- 20ppm accuracy		14.31818		MHz
			24.576		MHz
Output Rise Time	0.8V to 2.0V with no load			1.5	ns
Output Fall Time	2.0V to 0.8V with no load			1.5	ns
Duty Cycle	At VDD/2	45	50	55	%
Duty Cycle 8MHz clock	At VDD/2	43	50	57	%
Max. Absolute Period Jitter	Long term, No SST			150	ps
Max. Jitter, cycle to cycle	Long term + Short term			120	ps

3. DC Specifications

PARAMETERS	SYMBOL	CONDITIONS	MIN.	TYP.	MAX.	UNITS
Operating Voltage	V_{DD}	Nominal voltage 3.3V	2.97		3.63	V
Input High Voltage	V_{IH}			$V_{DD}/2$		V
Input Low Voltage	V_{IL}			$V_{DD}/2$	$V_{DD}/2 - 1$	V
Input High Voltage	V_{IH}	For all Tri-level input	V_{DD}-0.5			V
Input Low Voltage	V_{IL}	For all Tri-level input			0.5	V
Input High Voltage	V_{IH}	For all normal input	2			V
Input Low Voltage	V_{IL}	For all normal input			0.8	V
Output High Voltage	V_{OH}	I_{OH} = -30mA (normal drive)	2.4			V
		I_{OH} = -60mA (double drive)				
Output Low Voltage	V_{OL}	I_{OL} = 30mA (normal drive)			0.4	V
		I_{OH} = -60mA (double drive)				
Output High Voltage At CMOS Level	V_{OH}	I_{OH} = -8mA	V_{DD}-0.4			V
Nominal Output Current	I_{OUT}	Normal drive strength	30			mA
		Double drive strength	60			
Operating Supply Current	I_{DD}	No Load		17		mA
Short-circuit Current	I_S			±100		mA

PACKAGE INFORMATION

16 PIN Narrow SOIC, TSSOP (mm)

	SOIC		TSSOP	
Symbol	Min.	Max.	Min.	Max.
A	1.35	1.75	-	1.20
A1	0.10	0.25	0.05	0.15
B	0.33	0.51	0.19	0.30
C	0.19	0.25	0.09	0.20
D	9.80	10.00	4.90	5.10
E	3.80	4.00	4.30	4.50
H	5.80	6.20	6.40 BSC	
L	0.40	1.27	0.45	0.75
e	1.27 BSC		0.65 BSC	

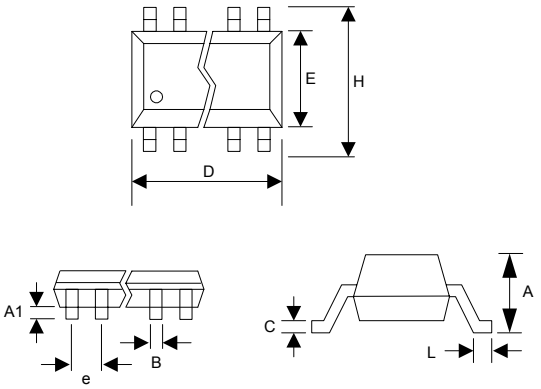

ORDERING INFORMATION

For part ordering, please contact our Sales Department:
47745 Fremont Blvd., Fremont, CA 94538, USA
Tel: (510) 492-0990 Fax: (510) 492-0991

PART NUMBER

The order number for this device is a combination of the following:
Device number, Package type and Operating temperature range

PLL702-02 X C X X

PART NUMBER

NONE= TUBE
R=TAPE AND REEL

NONE=NORMAL PACKAGE
L=GREEN PACKAGE

PACKAGE TYPE
O=TSSOP
S = SOIC

TEMPERATURE
C=COMMERCIAL,
I=INDUSTRIAL

Part / Order Number	Marking	Package Option	Temperature
PLL702-02XCR	P702-02XC	SSOP/SOIC -Tape and Reel	0 to +70° C
PLL702-02XC	P702-02XC	SSOP/SOIC -Tubes	0 to +70° C
PLL702-02XCLR	P702-02XCL	SSOP/SOIC -Tape and Reel (GRREN)	0 to +70° C
PLL702-02XCL	P702-02XCL	SSOP/SOIC –Tubes (GREEN)	0 to +70° C

PhaseLink Corporation, reserves the right to make changes in its products or specifications, or both at any time without notice. The information furnished by Phaselink is believed to be accurate and reliable. However, PhaseLink makes no guarantee or warranty concerning the accuracy of said information and shall not be responsible for any loss or damage of whatever nature resulting from the use of, or reliance upon this product.

LIFE SUPPORT POLICY: PhaseLink's products are not authorized for use as critical components in life support devices or systems without the express written approval of the President of PhaseLink Corporation.