P4C1681, P4C1682
ULTRA HIGH SPEED 4K x 4
STATIC CMOS RAMS

FEATURES

- **Full CMOS, 6T Cell**
- **High Speed (Equal Access and Cycle Times)**
  - **– 12/15/20/25 ns (Commercial)**
  - **– 20/25/35ns (P4C1682 Military)**
- **Low Power Operation (Commercial)**
  - **– 715 mW Active – 12, 15**
  - **– 550 mW Active – 20/25/35**
  - **– 193 mW Standby (TTL Input)**
  - **– 83 mW Standby (CMOS Input)**
- **Single 5V ± 10%Power Supply**
- **Separate Inputs and Outputs**
  - **– P4C1681 Input Data at Outputs during Write**
  - **– P4C1682 Outputs in High Z during Write**
- **Fully TTL Compatible Inputs and Outputs**
- **Standard Pinout (JEDEC Approved)**
  - **– 24-Pin 300 mil DIP**
  - **– 24-Pin 300 mil SOIC**
  - **– 24-Pin 300 mil SOJ**
  - **– 24-Pin CERDIP**
  - **– 28-Pin LCC (450 mil x 450 mil)**

DESCRIPTION

The P4C1681 and P4C1682 are 16,384-bit (4K x 4) ultra high speed static RAMs similar to the P4C168, but with separate data I/O pins. The P4C1681 features a transparent write operation; the outputs of the P4C1682 are in high impedance during the write cycle. All devices have low power standby modes. The RAMs operate from a single 5V ± 10% tolerance power supply.

Access times as fast as 12 nanoseconds are available, permitting greatly enhanced system operating speeds. CMOS is used to reduce power consumption to a low 715 mW active, 193 mW standby. For the P4C1682 and P4C1681, power is only 83 mW standby with CMOS input levels.

The P4C1681 and P4C1682 are available in 24-pin 300 mil DIP and SOIC packages providing excellent board level densities. The P4C1682 is also available in a 28-pin LCC package.

FUNCTIONAL BLOCK DIAGRAM

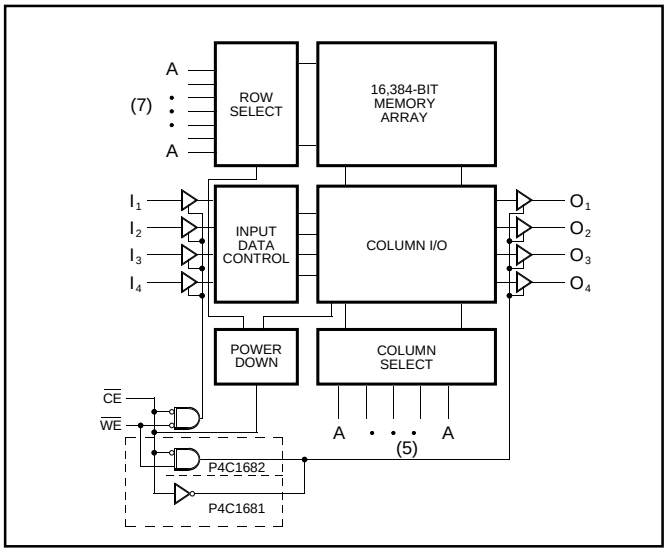

PIN CONFIGURATIONS

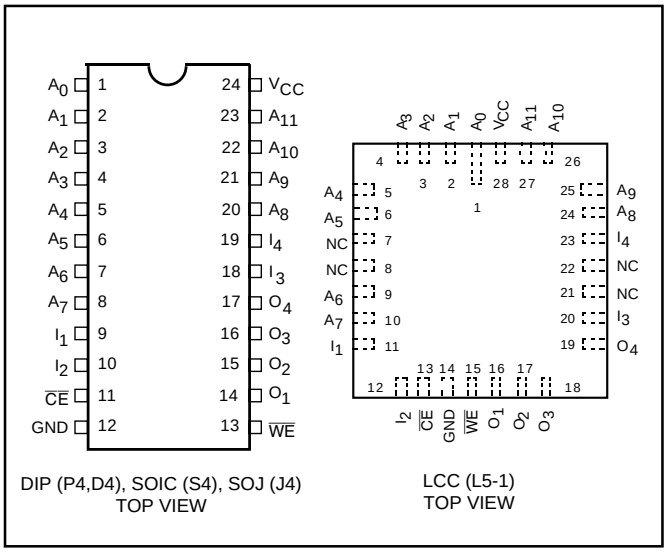

DIP (P4,D4), SOIC (S4), SOJ (J4)
TOP VIEW

LCC (L5-1)
TOP VIEW

MAXIMUM RATINGS[1]

Symbol	Parameter	Value	Unit
V_{CC}	Power Supply Pin with Respect to GND	–0.5 to +7	V
V_{TERM}	Terminal Voltage with Respect to GND (up to 7.0V)	–0.5 to V_{CC} +0.5	V
T_A	Operating Temperature	–55 to +125	°C

Symbol	Parameter	Value	Unit
T_{BIAS}	Temperature Under Bias	–55 to +125	°C
T_{STG}	Storage Temperature	–65 to +150	°C
P_T	Power Dissipation	1.0	W
I_{OUT}	DC Output Current	50	mA

RECOMMENDED OPERATING TEMPERATURE AND SUPPLY VOLTAGE

Grade(2)	Ambient Temperature	GND	V_{CC}
Military	–55°C to +125°C	0V	5.0V ± 10%
Commercial	0°C to +70°C	0V	5.0V ± 10%

CAPACITANCES[(4)]

V_{CC} = 5.0V, T_A = 25°C, f = 1.0MHz

Symbol	Parameter	Conditions	Typ.	Unit
C_{IN}	Input Capacitance	V_{IN} = 0V	5	pF
C_{OUT}	Output Capacitance	V_{OUT} = 0V	7	pF

DC ELECTRICAL CHARACTERISTICS

Over Recommended operating temperature and supply voltages(2)

Sym.	Parameter	Test Conditions		P4C1681 P4C1682 Min	P4C1682 Max	Unit
V_{IH}	Input High Voltage			2.2	V_{CC} +0.5	V
V_{IL}	Input Low Voltage			–0.5[(3)]	0.8	V
V_{HC}	CMOS Input High Voltage			V_{CC} –0.2	V_{CC} +0.5	V
V_{LC}	CMOS Input Low Voltage			–0.5[(3)]	0.2	V
V_{CD}	Input Clamp Diode Voltage	V_{CC} = Min., I_{IN} = –18 mA			–1.2	V
V_{OL}	Output Low Voltage (TTL Load)	I_{OL} = +8 mA, V_{CC} = Min.			0.4	V
V_{OLC}	Output Low Voltage (CMOS Load)	I_{OLC} = +100 µA, V_{CC} = Min.			0.2	V
V_{OH}	Output High Voltage (TTL Load)	I_{OH} = –4 mA, V_{CC} = Min.		2.4		V
V_{OHC}	Output High Voltage (CMOS Load)	I_{OHC} = –100 µA, V_{CC} = Min.		V_{CC} –0.2		V
I_{LI}	Input Leakage Current	V_{CC} = Max. V_{IN} = GND to V_{CC}	Mil. Comm'l	–10 –5	+10 +5	µA µA
I_{LO}	Output Leakage Current	V_{CC} = Max. $\overline{CE}$ = V_{IH} V_{OUT} = GND to V_{CC}	Mil. Comm'l	–10 –5	+10 +5	µA µA

Notes:

1. Stresses greater than those listed under MAXIMUM RATINGS may cause permanent damage to the device. This is a stress rating only and functional operation of the device at these or any other conditions above those indicated in the operational sections of this specification is not implied. Exposure to MAXIMUM rating conditions for extended periods may affect reliability.
2. Extended temperature operation guaranteed with 400 linear feet per minute of air flow.
3. Transient inputs with V_{IL} and I_{IL} not more negative than –3.0V and –100mA, respectively, are permissible for pulse widths up to 20ns.
4. This parameter is sampled and not 100% tested.

POWER DISSIPATION CHARACTERISTICS

Over recommended operating temperature and supply voltage[2]

Symbol	Parameter	Test Conditions		P4C1681 P4C1682 Min	P4C1682 Max	Unit
I_{CC}	Dynamic Operating Current – 12, 15	V_{CC} = Max., f = Max., Outputs Open	Comm'l	—	130	mA
I_{CC}	Dynamic Operating Current – 20, 25, 35	V_{CC} = Max., f = Max., Outputs Open	Mil.	–	130	mA
			Comm'l	—	100	mA
I_{SB}	Standby Power Supply Current (TTL Input Levels)	$\overline{CE} \geq V_{IH}$, V_{CC} = Max., f = Max., Outputs Open		—	35	mA
I_{SB1}	Standby Power Supply Current (CMOS Input Levels)	$\overline{CE} \geq V_{HC}$, V_{CC} = Max., f = 0, Outputs Open, $V_{IN} \leq V_{LC}$ or $V_{IN} \geq V_{HC}$		—	15	mA

AC ELECTRICAL CHARACTERISTICS—READ CYCLE

(V_{CC} = 5V ± 10%, All Temperature Ranges)[2]

Symbol	Parameter	-12		-15		-20		-25		-35		Unit
		Min	Max	Min	Max	Min	Max	Min	Max	Min	Max	
t_{RC}	Read Cycle Time	12		15		20		25		35		ns
t_{AA}	Address Access Timens		12		15		20		25		35	ns
t_{AC}	Chip Enable Access Time		12		15		20		25		35	ns
t_{OH}	Output Hold from Address Change	2		2		3		3		3		ns
t_{LZ}	Chip Enable to Output in Low Z	2		2		3		3		3		ns
t_{HZ}	Chip Disable to Output in High Z		6		7		9		10		15	ns
t_{RCS}	Read Command Setup Time	0		0		0		0		0		ns
t_{RCH}	Read Command Hold Time	0		0		0		0		0		ns
t_{PU}	Chip Enable to Power Up Time	0		0		0		0		0		ns
t_{PD}	Chip Disable to Power Down Time		12		15		20		25		25	ns

READ CYCLE NO. 1 (ADDRESS controlled)[5, 6]

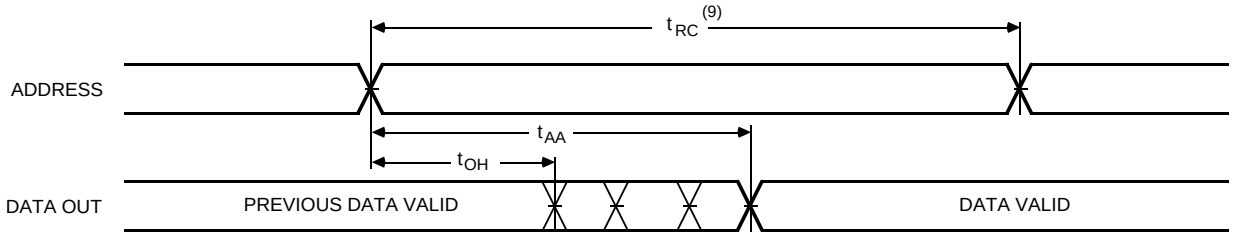

READ CYCLE NO. 2 ($\overline{CE}$ controlled)[5, 7]

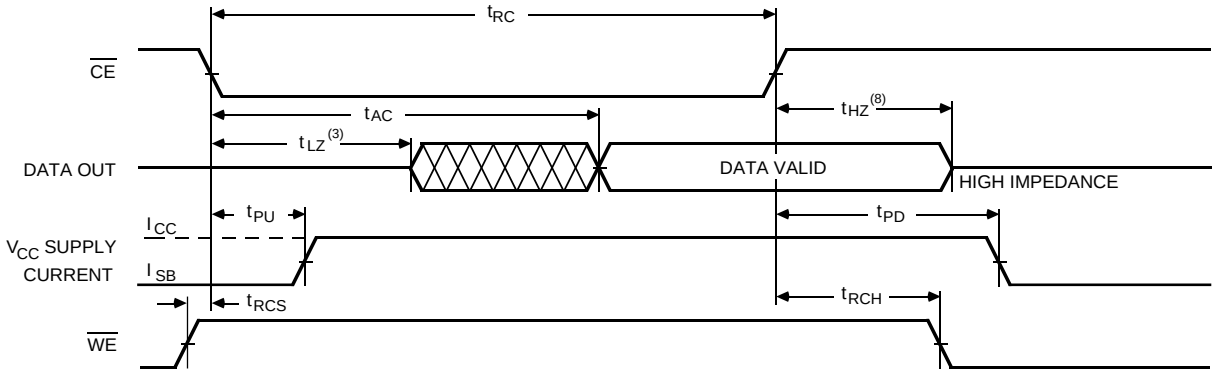

Notes:

5. $\overline{WE}$ is HIGH for READ cycle.
6. $\overline{CE}$, $\overline{OE}$ are LOW for READ cycle.
7. ADDRESS must be valid prior to, or coincident with, $\overline{CE}$ transition LOW.
8. Transition is measured ±200mV from steady state voltage prior to change, with loading as specified in Figure 1.
9. Read Cycle Time is measured from the last valid address to the first transitioning address.

AC ELECTRICAL CHARACTERISTICS—WRITE CYCLE

(V_{CC} = 5V ± 10%, All Temperature Ranges)[2]

Symbol	Parameter	-12		-15		-20		-25		-35		Unit
		Min	Max	Min	Max	Min	Max	Min	Max	Min	Max	
t_{WC}	Write Cycle Time	12		15		18		20		30		ns
t_{CW}	Chip Enable Time to End of Write	12		15		18		20		25		ns
t_{AW}	Address Valid to End of Write	12		15		18		20		25		ns
t_{AS}	Address Set-up Time	0		0		0		0		0		ns
t_{WP}	Write Pulse Width	12		15		18		20		25		ns
t_{AH}	Address Hold Time	0		0		0		0		0		ns
t_{DW}	Data Valid to End of Write	7		8		10		10		15		ns
t_{DH}	Data Hold Time	0		0		0		0		0		ns
t_{WZ}	Write Enable to Output in High Z†		4		5		7		7		13	ns
t_{OW}	Output Active to End of Write	0		0		0		0		0		ns
t_{AWE}	Write Enable to Data-out Valid£		12		15		20		25		30	ns
t_{ADV}	Data-in Valid to Data-out Valid		12		15		20		25		30	ns

† P4C1682 only.

£ P4C1681 only.

WRITE CYCLE NO. 1 ($\overline{WE}$ controlled)[10]

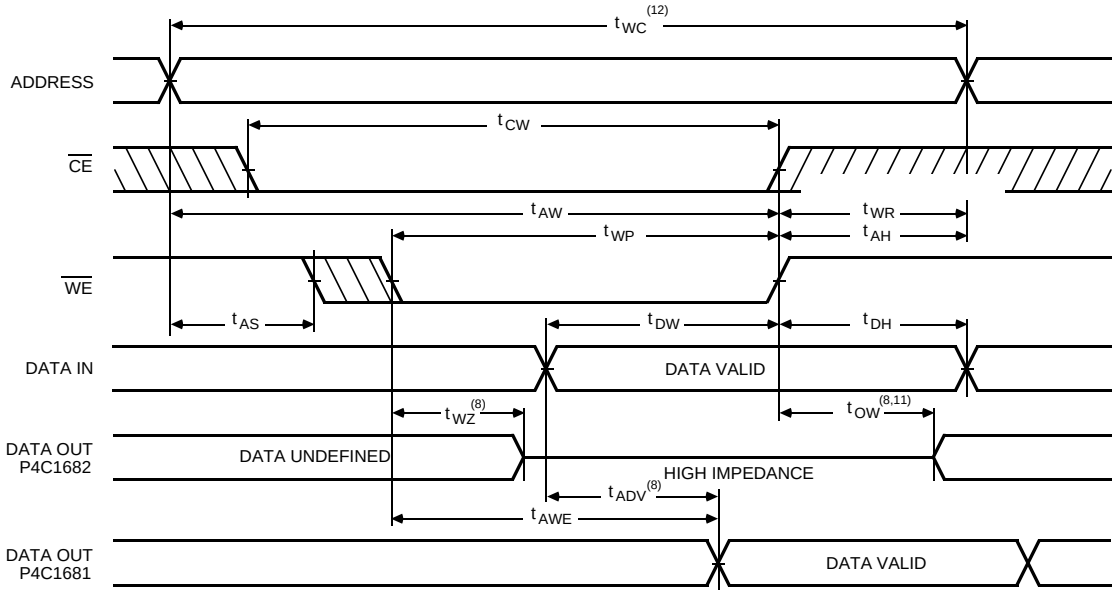

Notes:

10. $\overline{CE}$ and $\overline{WE}$ must be LOW for WRITE cycle.
11. If $\overline{CE}$ goes HIGH simultaneously with $\overline{WE}$ HIGH, the output remains in a high impedance state.
12. Write Cycle Time is measured from the last valid address to the first transitioning address.

PACKAGE SUFFIX

Package Suffix	Description
P	Plastic DIP, 300 mil wide standard
J	Plastic SOJ
D	CERDIP, 300 mil wide standard
S	Small Outline IC
L	LCC Package

TEMPERATURE RANGE SUFFIX

Temperature Range Suffix	Description
C	Commercial Temperature Range, –0°C to +70°C.
M	Military Temperature Range, –55°C to +125°C.
MB	Mil. Temp. with MIL-STD-883C Class D compliance

ORDERING INFORMATION

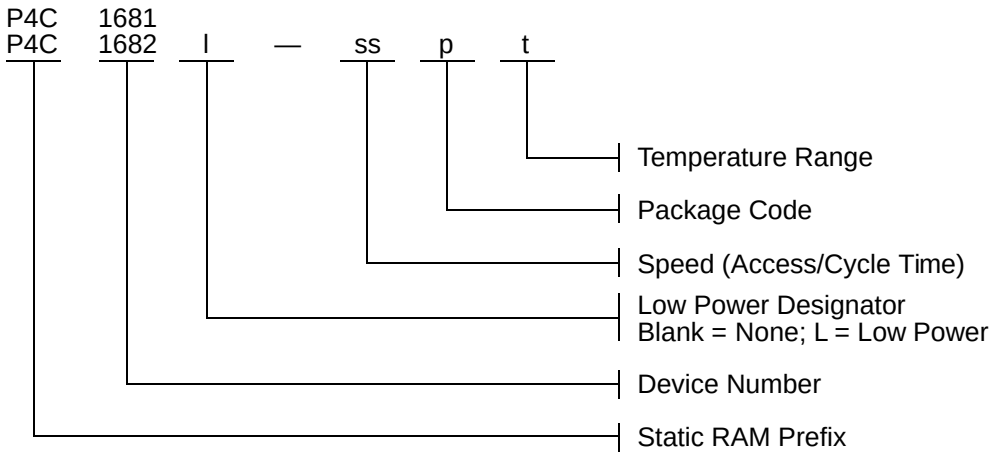

l = Ultra-low standby power designator L, if available.
ss = Speed (access/cycle time in ns), e.g., 25, 35
p = Package code, i.e., P, D, S, L.
t = Temperature range, i.e., C, M, MB.

SELECTION GUIDE

The P4C1681 and P4C1682 are available in the following temperature, speed and package options.

Temperature Range	Package \ Speed (ns)	12	15	20	25	35
Commercial	Plastic DIP	-12PC	-15PC	-20PC	-25PC	N/A
	SOIC	-12SC	-15SC	-20SC	-25SC	N/A
	SOJ	-12JC	-15JC	-20JC	-25JC	N/A
Military Temp. (P4C1682 Only)	LCC	N/A	N/A	-20LM	-25LM	-35LM
	CERDIP	N/A	N/A	-20DM	-25DM	-35DM
Military Processed* (P4C1682 Only)	LCC	N/A	N/A	-20LMB	-25LMB	-35LMB
	CERDIP	N/A	N/A	-20DMB	-25DMB	-35DMB

* Military temperature range with MIL-STD-883 Revision D, Class B processing.
N/A = Not available