Smart Lowside Power Switch

Features

- Logic Level Input
- Input Protection (ESD)
- Thermal Shutdown
- Overload protection
- Short circuit protection
- Overvoltage protection
- Current limitation
- Maximum current adjustable with external resistor
- Current sense
- Status feedback with external input resistor
- Analog driving possible

Product Summary

Drain source voltage	V_{DS}	60	V
On-state resistance	$R_{DS(on)}$	18	mΩ
Current limit	$I_{D(lim)}$	9.5	A
Nominal load current	$I_{D(ISO)}$	19	A
Clamping energy	E_{AS}	6000	mJ

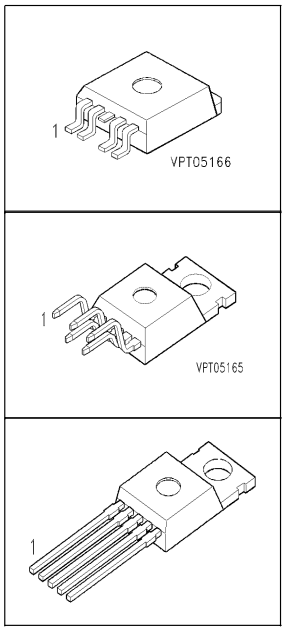

Application

- All kinds of resistive, inductive and capacitive loads in switching or linear applications
- µC compatible power switch for 12 V and 24 V DC applications
- Replaces electromechanical relays and discrete circuits

General Description

N channel vertical power FET in Smart SIPMOS® chip on chip technology. Fully protected by embedded protected functions.

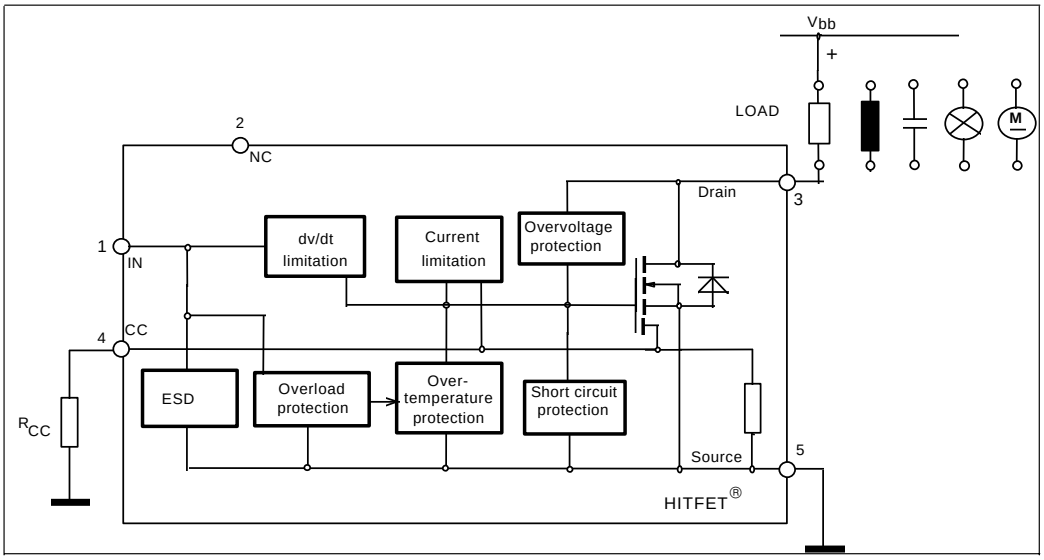

Maximum Ratings at Tj = 25 °C unless otherwise specified

Parameter	Symbol	Value	Unit
Drain source voltage	V_{DS}	60	V
Drain source voltage for short circuit protection R_{CC} = 0 Ω without R_{CC}	$V_{DS(SC)}$	 15 50	
Continuous input current [1] -0.2V ≤ V_{IN} ≤ 10V V_{IN} < -0.2V or V_{IN} > 10V	I_{IN}	 no limit $\lvert I_{IN} \rvert \leq 2$	mA
Operating temperature	T_j	- 40 ... +150	°C
Storage temperature	T_{stg}	- 55 ... +150	
Power dissipation T_C = 25 °C	P_{tot}	240	W
Unclamped single pulse inductive energy $I_{D(ISO)}$ = 19 A	E_{AS}	6000	mJ
Electro**s**tatic **d**ischarge voltage (Human Body Model) according to MIL STD 883D, method 3015.7 and EOS/ESD assn. standard S5.1 - 1993	V_{ESD}	3000	V
Load dump protection $V_{LoadDump}$[2] = V_A + V_S V_{IN}=low or high; V_A=13.5 V t_d = 400 ms, R_I = 2 Ω, I_D=0,5*19A t_d = 400 ms, R_I = 2 Ω, I_D= 19A	V_{LD}	 110 92	V
DIN humidity category, DIN 40 040		E	
IEC climatic category; DIN IEC 68-1		40/150/56	

Thermal resistance

junction - case:	R_{thJC}	0.7	K/W
junction - ambient:	R_{thJA}	75	
SMD version, device on PCB: [3]	R_{thJA}	45	

[1] A sensor holding current of 500 µA has to be guaranted in the case of thermal shutdown (see also page 3)

[2] $V_{Loaddump}$ is setup without the DUT connected to the generator per ISO 7637-1 and DIN 40839

[3] Device on 50mm*50mm*1.5mm epoxy PCB FR4 with 6cm^2 (one layer, 70 µm thick) copper area for Drain connection. PCB is vertical without blown air.

Electrical Characteristics

Parameter at T_j=25°C, unless otherwise specified	Symbol	Values			Unit
		min.	typ.	max.	
Characteristics					
Drain source clamp voltage T_j = - 40 ...+ 150°C, I_D = 10 mA	$V_{DS(AZ)}$	60	-	73	V
Off state drain current V_{DS} = 32 V, T_j = -40...+150 °C, V_{IN} = 0 V	I_{DSS}	-	-	25	µA
Input threshold voltage I_D = 3,9 mA	$V_{IN(th)}$	1.3	1.7	2.2	V
Input current - normal operation, I_D<$I_{D(lim)}$: V_{IN} = 10 V	$I_{IN(1)}$	-	-	100	µA
Input current - current limitation mode, I_D=$I_{D(lim)}$: V_{IN} = 10 V	$I_{IN(2)}$	-	400	1000	
Input current - after thermal shutdown, I_D=0 A: V_{IN} = 10 V	$I_{IN(3)}$	1500	3000	6000	
Input holding current after thermal shutdown T_j = 25 °C T_j = 150 °C	$I_{IN(H)}$	 500 300	 - -	 - -	
On-state resistance I_D = 19 A, V_{IN} = 5 V, T_j = 25 °C I_D = 19 A, V_{IN} = 5 V, T_j = 150 °C	$R_{DS(on)}$	 - -	 18 30	 22 44	mΩ
On-state resistance I_D = 19 A, V_{IN} = 10 V, T_j = 25 °C I_D = 19 A, V_{IN} = 10 V, T_j = 150 °C	$R_{DS(on)}$	 - -	 14 25	 18 36	
Nominal load current (ISO 10483) V_{IN} = 10 V, V_{DS} = 0.5 V, T_C = 85 °C	$I_{D(ISO)}$	19	-	-	A

Electrical Characteristics

Parameter at T_j=25°C, unless otherwise specified	Symbol	Values			Unit
		min.	typ.	max.	
Characteristics					
Initial peak short circuit current limit V_{IN} = 10 V, V_{DS} = 12 V	$I_{D(SCp)}$	-	175	-	A
Current limit [1)] V_{IN} = 10 V, V_{DS} = 12 V, t_m = 350 µs, T_j = -40...+150 °C, without R_{CC} V_{IN} = 10 V, V_{DS} = 12 V, t_m = 350 µs, T_j = -40...+150 °C, R_{CC} = 0 Ω	$I_{D(lim)}$	 9.5 150	 19 220	 40 270	
Dynamic Characteristics					
Turn-on time V_{IN} to 90% I_D: R_L = 1 Ω, V_{IN} = 0 to 10 V, V_{bb} = 12 V	t_{on}	-	40	100	µs
Turn-off time V_{IN} to 10% I_D: R_L = 1 Ω, V_{IN} = 10 to 0 V, V_{bb} = 12 V	t_{off}	-	70	170	
Slew rate on 70 to 50% V_{bb}: R_L = 1 Ω, V_{IN} = 0 to 10 V, V_{bb} = 12 V	$-dV_{DS}/dt_{on}$	-	1	3	V/µs
Slew rate off 50 to 70% V_{bb}: R_L = 1 Ω, V_{IN} = 10 to 0 V, V_{bb} = 12 V	dV_{DS}/dt_{off}	-	1	3	
Protection Functions					
Thermal overload trip temperature	T_{jt}	150	165	-	°C
Unclamped single pulse inductive energy I_D = 19 A, T_j = 25 °C, V_{bb} = 32 V I_D = 19 A, T_j = 150 °C, V_{bb} = 32 V	E_{AS}	 6000 1800	 - -	 - -	mJ
Inverse Diode					
Inverse diode forward voltage I_F = 5*19A, t_m = 300 µs, V_{IN} = 0 V	V_{SD}	-	1,1	-	V

[1]Device switched on into existing short circuit (see diagram Determination of $I_{D(lim)}$. Dependant on the application, these values might be exceeded for max. 50 µs in case of short circuit occurs while the device is on condition

Block Diagramm

Terms

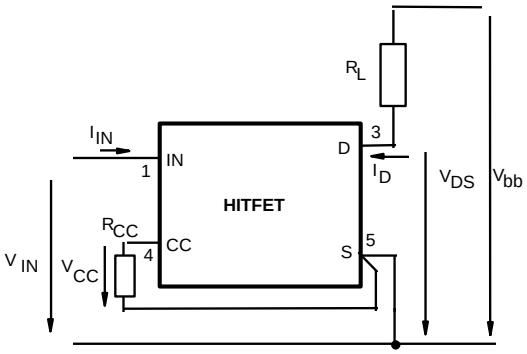

The ground lead impedance of R_{CC} should be as low as possible

Input circuit (ESD protection)

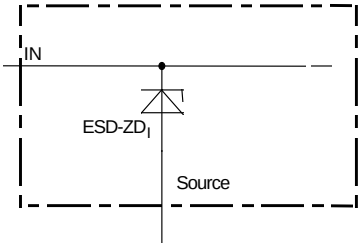

ESD zener diodes are not designed for DC current > 2 mA @ V_{IN}>10V.

Inductive and overvoltage output clamp

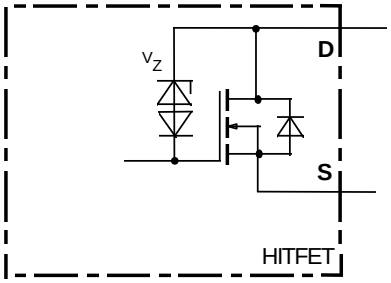

Short circuit behaviour

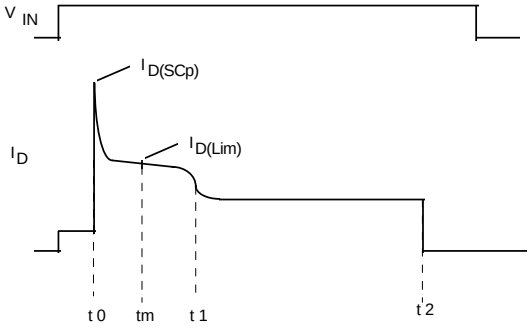

t_0: Turn on into a short circuit

t_m: Measurementpoint for $I_{D(lim)}$

t_1: Activation of the fast temperature sensor and regulation of the drain current to a level wher the junction temperature remains constant.

t_2: Thermal shutdown caused by the second temperature sensor, achieved by an integrating measurement.

Maximum allowable power dissipation

$P_{tot} = f(T_c)$

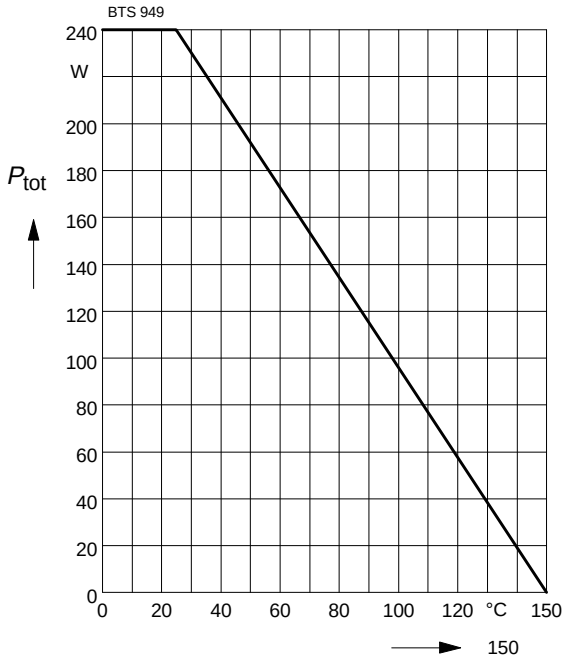

On-state resistance

$R_{ON} = f(T_j)$; I_D=19A; V_{IN}=10V

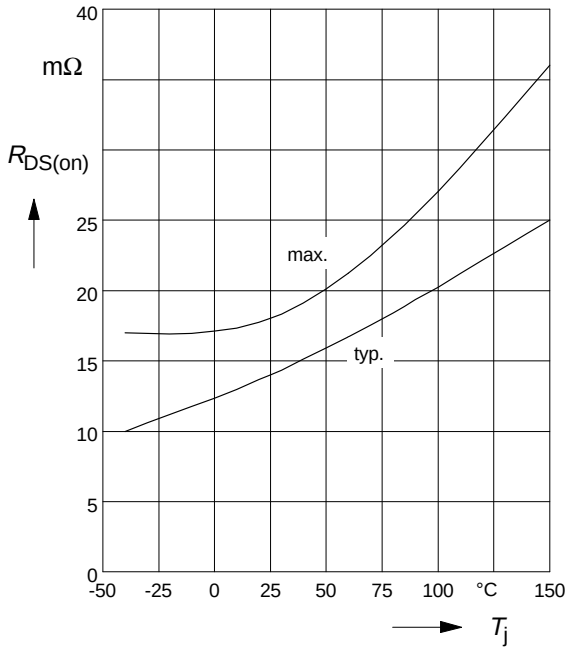

On-state resistance

$R_{ON} = f(T_j)$; I_D= 19A; V_{IN}=5V

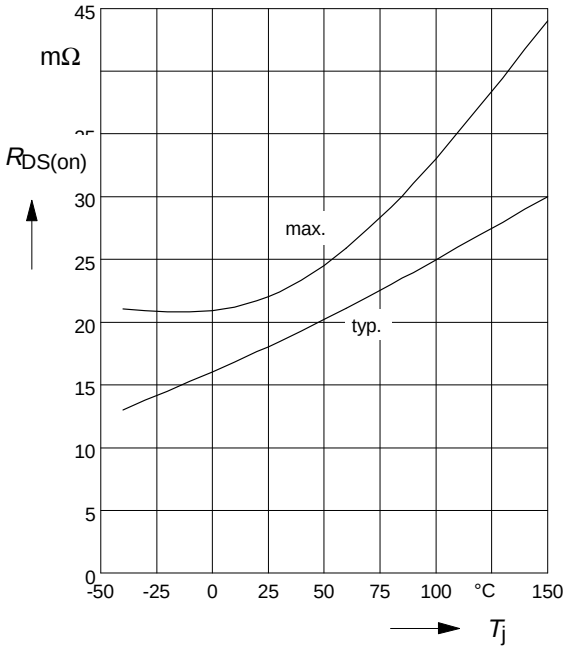

Typ. input threshold voltage

$V_{IN(th)} = f(T_j)$; I_D=3,9A; V_{DS}=12V

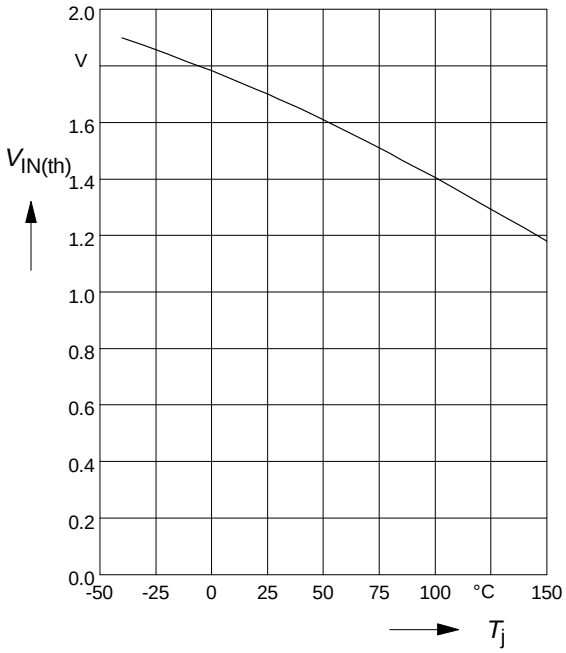

Typ. transfer characteristics

I_D = f(V_{IN}); V_{DS}=12V; T_j=25°C

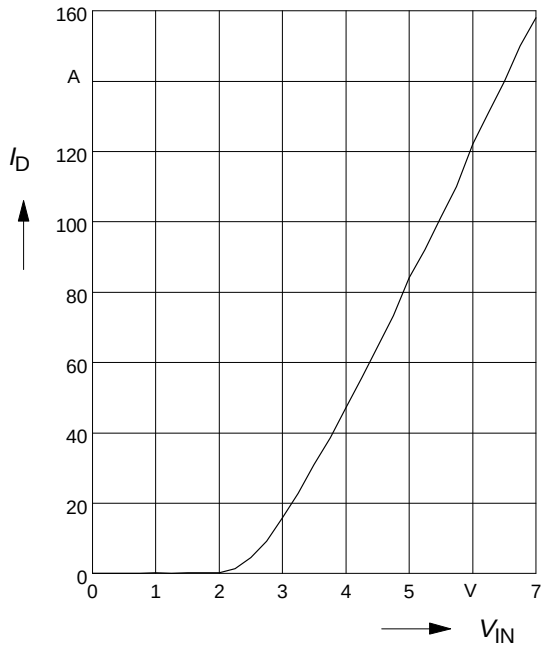

Typ. short circuit current

I_{Dlim} = f(Tj); R_{CC}=0Ω, V_{DS}=12V

Parameter: V_{IN}

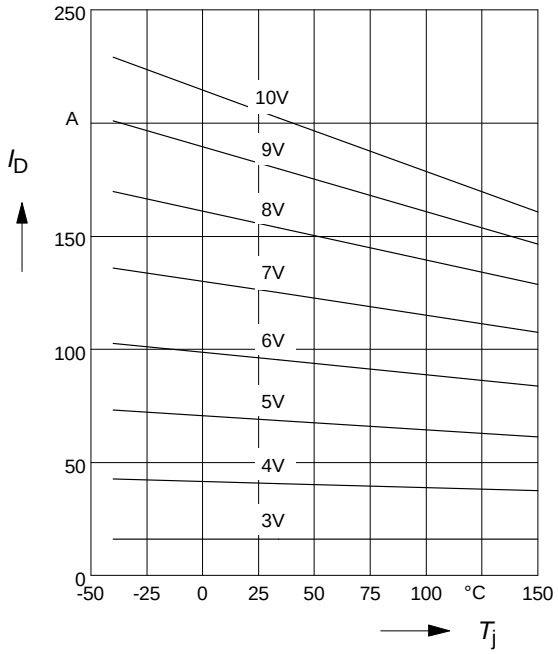

Typ. output characteristic

I_D = f(V_{DS}); T_j=25°C

Parameter: V_{IN}

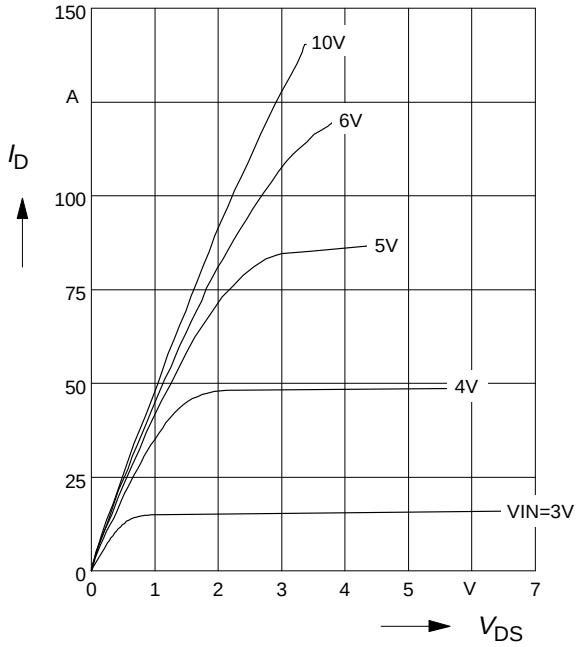

Safe Operating Area

$I_{D(SC)}$ = f(V_{DS}); T_j=25°C

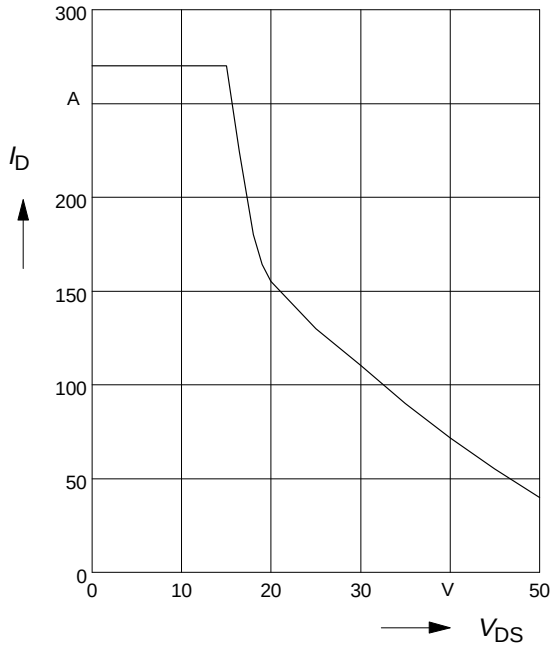

Typ. current limit versus R_{CC}

$I_{D(lim)} = f(R_{CC})$; T_j=25°C

Parameter: V_{IN}

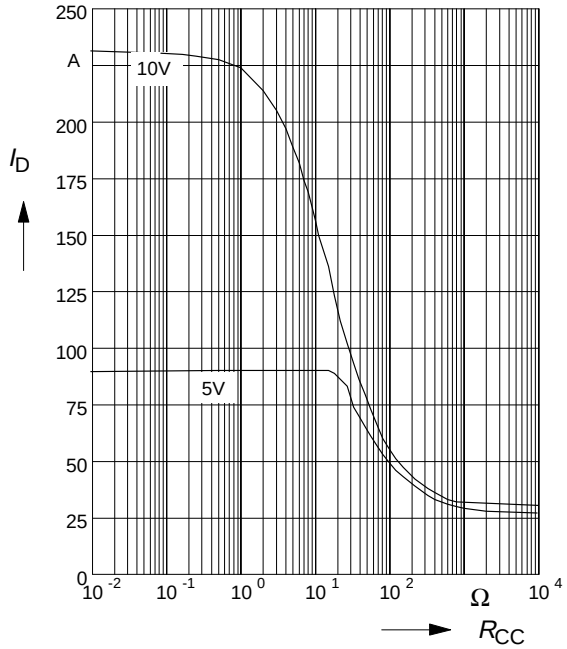

Typ. current sense characteristics

$V_{CC} = f(I_D)$; V_{IN}=10V

Parameter: R_{CC}, T_j

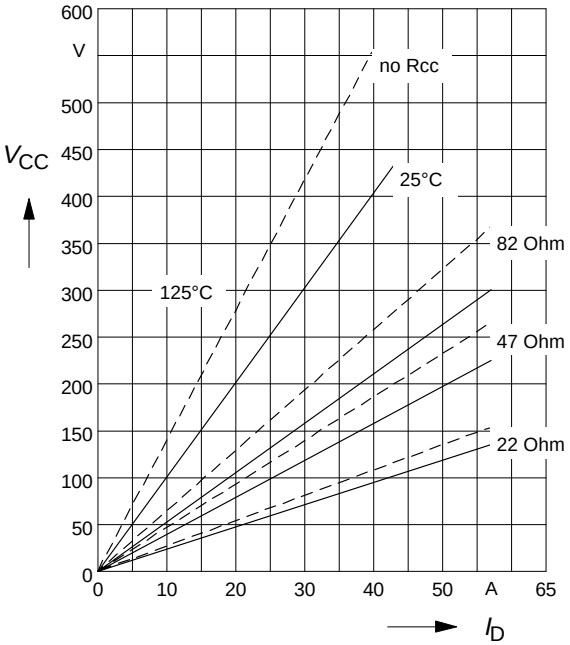

Transient thermal impedance

$Z_{thJC} = f(t_P)$

Parameter: $D=t_P/T$

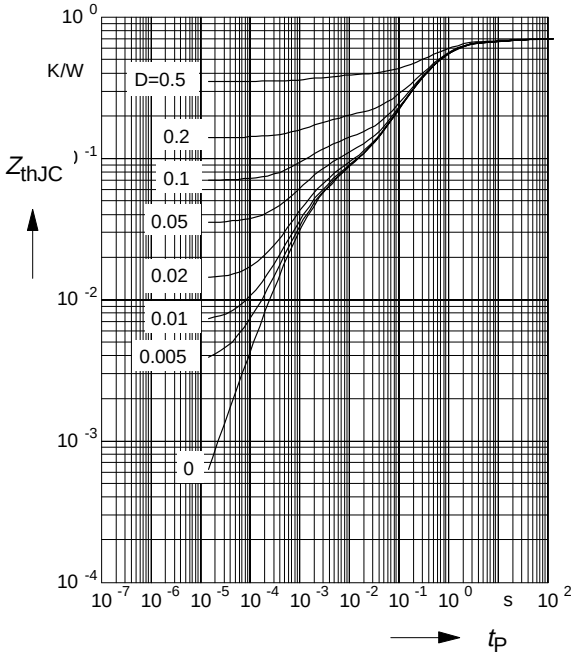

Application examples:

Current Sense Features and Status Signals

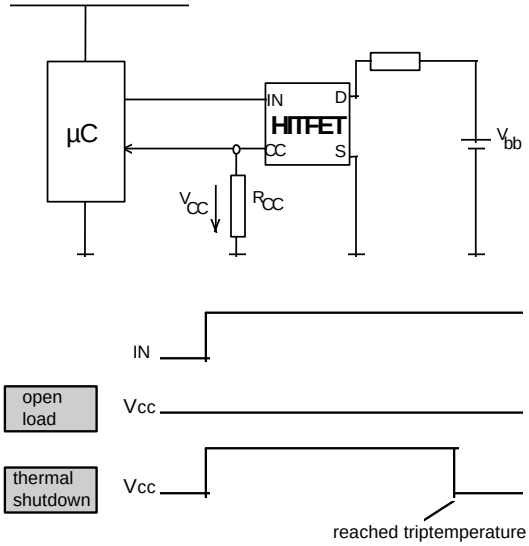

The accuray of Vcc is at each temperature about ±10 %

Status signal of thermal shutdown by monitoring input current

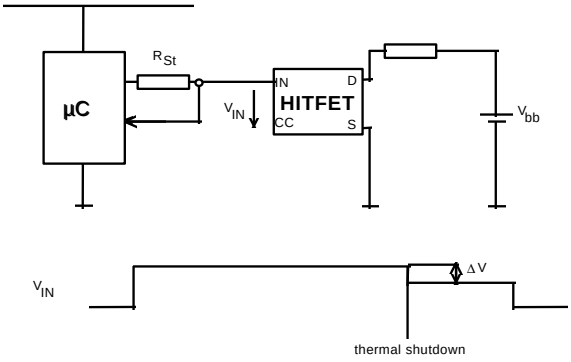

$\Delta V = R_{ST} * I_{IN(3)}$

Package and ordering code

all dimensions in mm

Ordering code: Q67060-S6703-A4

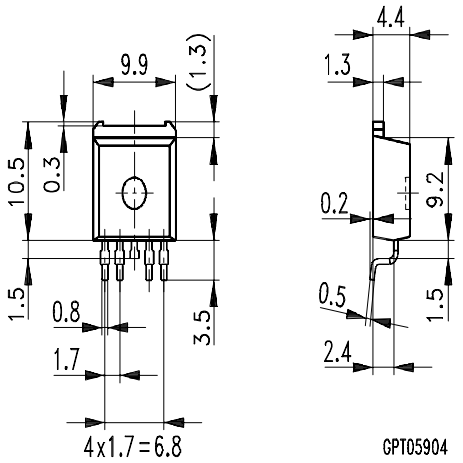

Ordering Code: Q67060-S6703-A2

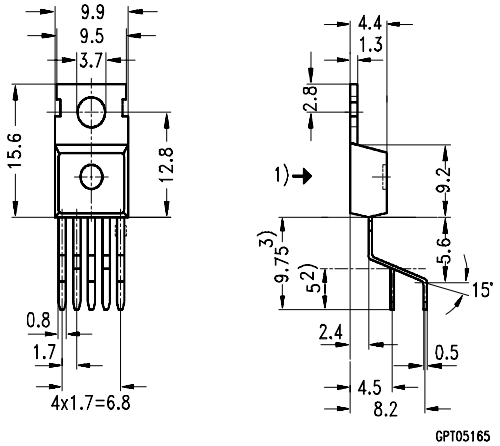

1) shear and punch direction no burrs this surface
2) min. length by tinning
3) max. 11 mm allowable by tinning

Ordering Code: Q67060-S6703-A3

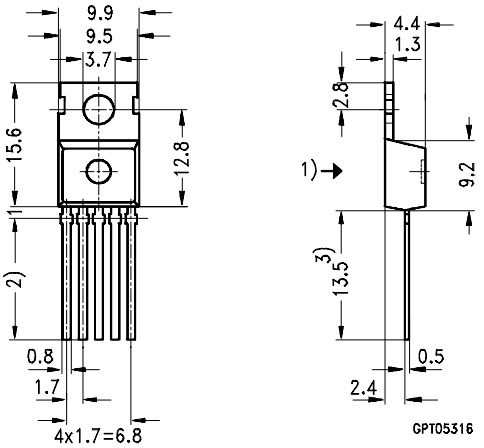

1) punch direction, burr max. 0.04
2) dip tinning
3) max. 14.5 by dip tinning press burr max. 0.05

Edition 7.97
Published by Siemens AG,
Bereich Halbleiter Vetrieb,
Werbung, Balanstraße 73,
81541 München
© Siemens AG 1997
All Rights Reserved.

Attention please!

As far as patents or other rights of third parties are concerned, liability is only assumed for components, not for applications, processes and circuits implemented within components or assemblies.
The information describes a type of component and shall not be considered as warranted characteristics.
Terms of delivery and rights to change design reserved.
For questions on technology, delivery and prices please contact the Semiconductor Group Offices in Germany or the Siemens Companies and Representatives worldwide (see address list).
Due to technical requirements components may contain dangerous substances. For information on the types in question please contact your nearest Siemens Office, Semiconductor Group.
Siemens AG is an approved CECC manufacturer.

Packing

Please use the recycling operators known to you. We can also help you - get in touch with your nearest sales office. By agreement we will take packing material back, if it is sorted. You must bear the costs of transport. For packing material that is returned to us unsorted or which we are not obliged to accept, we shall have to invoice you for any costs incurred.

Components used in life-support devices or systems must be expressly authorized for such purpose!

Critical components[1] of the Semiconductor Group of Siemens AG, may only be used in life-support devices or systems[2] with the express written approval of the Semiconductor Group of Siemens AG.

1) A critical component is a component used in a life-support device or system whose failure can reasonably be expected to cause the failure of that life-support device or system, or to affect its safety or effectiveness of that device or system.
2) Life support devices or systems are intended (a) to be implanted in the human body, or (b) to support and/or maintain and sustain and/or protecf human life. If they fail, it is reasonable to assume that the health of the user or other persons may be endangered.