256 Kbit / 512 Kbit / 1 Mbit / 2 Mbit (x8) Many-Time Programmable Flash

SST27SF256 / SST27SF512 / SST27SF010 / SST27SF020

Data Sheet

FEATURES:

- **Organized as 32K x8 / 64K x8 / 128K x8 / 256K x8**
- **4.5-5.5V Read Operation**
- **Superior Reliability**
  - Endurance: At least 1000 Cycles
  - Greater than 100 years Data Retention
- **Low Power Consumption**
  - Active Current: 20 mA (typical)
  - Standby Current: 10 µA (typical)
- **Fast Read Access Time**
  - 70 ns
  - 90 ns
- **Fast Byte-Program Operation**
  - Byte-Program Time: 20 µs (typical)
  - Chip Program Time:
    0.7 seconds (typical) for SST27SF256
    1.4 seconds (typical) for SST27SF512
    2.8 seconds (typical) for SST27SF010
    5.6 seconds (typical) for SST27SF020
- **Electrical Erase Using Programmer**
  - Does not require UV source
  - Chip-Erase Time: 100 ms (typical)
- **TTL I/O Compatibility**
- **JEDEC Standard Byte-wide EPROM Pinouts**
- **Packages Available**
  - 32-lead PLCC
  - 32-lead TSOP (8mm x 14mm)
  - 28-pin PDIP for SST27SF256/512
  - 32-pin PDIP for SST27SF010/020

PRODUCT DESCRIPTION

The SST27SF256/512/010/020 are a 32K x8 / 64K x8 / 128K x8 / 256K x8 CMOS, Many-Time Programmable (MTP) low cost flash, manufactured with SST's proprietary, high performance SuperFlash technology. The split-gate cell design and thick oxide tunneling injector attain better reliability and manufacturability compared with alternate approaches. These MTP devices can be electrically erased and programmed at least 1000 times using an external programmer with a 12 volt power supply. They have to be erased prior to programming. These devices conform to JEDEC standard pinouts for byte-wide memories.

Featuring high performance Byte-Program, the SST27SF256/512/010/020 provide a Byte-Program time of 20 µs. Designed, manufactured, and tested for a wide spectrum of applications, these devices are offered with an endurance of at least 1000 cycles. Data retention is rated at greater than 100 years.

The SST27SF256/512/010/020 are suited for applications that require infrequent writes and low power nonvolatile storage. These devices will improve flexibility, efficiency, and performance while matching the low cost in nonvolatile applications that currently use UV-EPROMs, OTPs, and mask ROMs.

To meet surface mount and conventional through hole requirements, the SST27SF256/512 are offered in 32-lead PLCC, 32-lead TSOP, and 28-pin PDIP packages. The SST27SF010/020 are offered in 32-pin PDIP, 32-lead PLCC, and 32-lead TSOP packages. See Figures 1, 2, and 3 for pin assignments.

Device Operation

The SST27SF256/512/010/020 are a low cost flash solution that can be used to replace existing UV-EPROM, OTP, and mask ROM sockets. These devices are functionally (read and program) and pin compatible with industry standard EPROM products. In addition to EPROM functionality, these devices also support electrical Erase operation via an external programmer. They do not require a UV source to erase, and therefore the packages do not have a window.

Read

The Read operation of the SST27SF256/512/010/020 is controlled by CE# and OE#. Both CE# and OE# have to be low for the system to obtain data from the outputs. Once the address is stable, the address access time is equal to the delay from CE# to output (T_{CE}). Data is available at the output after a delay of T_{OE} from the falling edge of OE#, assuming that CE# pin has been low and the addresses have been stable for at least T_{CE}-$T_{OE.}$ When the CE# pin is high, the chip is deselected and a typical standby current of 10 µA is consumed. OE# is the output control and is used to gate data from the output pins. The data bus is in high impedance state when either CE# or OE# is high.

©2003 Silicon Storage Technology, Inc.

The SST logo and SuperFlash are registered trademarks of Silicon Storage Technology, Inc.
MTP is a trademark of Silicon Storage Technology, Inc.
These specifications are subject to change without notice.

Byte-Program Operation

The SST27SF256/512/010/020 are programmed by using an external programmer. The programming mode for SST27SF256/010/020 is activated by asserting 11.4-12.6V on V_{PP} pin, V_{DD} = 4.5-5.5V, V_{IL} on CE# pin, and V_{IH} on OE# pin. The programming mode for SST27SF512 is activated by asserting 11.4-12.6V on OE#/V_{PP} pin, V_{DD} = 4.5-5.5V, and V_{IL} on CE# pin. These devices are programmed byte-by-byte with the desired data at the desired address using a single pulse (CE# pin low for SST27SF256/512 and PGM# pin low for SST27SF010/020) of 20 µs. Using the MTP programming algorithm, the Byte-Programming process continues byte-by-byte until the entire chip has been programmed.

Chip-Erase Operation

The only way to change a data from a "0" to "1" is by electrical erase that changes every bit in the device to "1". Unlike traditional EPROMs, which use UV light to do the Chip-Erase, the SST27SF256/512/010/020 uses an electrical Chip-Erase operation. This saves a significant amount of time (about 30 minutes for each Erase operation). The entire chip can be erased in a single pulse of 100 ms (CE# pin low for SST27SF256/512 and PGM# pin for SST27SF010/020). In order to activate the Erase mode for SST27SF256/010/020, the 11.4-12.6V is applied to V_{PP} and A_9 pins, V_{DD} = 4.5-5.5V, V_{IL} on CE# pin, and V_{IH} on OE# pin. In order to activate Erase mode for SST27SF512, the 11.4-12.6V is applied to OE#/V_{PP} and A_9 pins, V_{DD} = 4.5-5.5V, and V_{IL} on CE# pin. All other address and data pins are "don't care". The falling edge of CE# (PGM# for SST27SF010/020) will start the Chip-Erase operation. Once the chip has been erased, all bytes must be verified for FFH. Refer to Figures 13, 14, and 15 for the flowcharts.

Product Identification Mode

The Product Identification mode identifies the devices as the SST27SF256, SST27SF512, SST27SF010 and SST27SF020 and manufacturer as SST. This mode may be accessed by the hardware method. To activate this mode for SST27SF256/010/020, the programming equipment must force V_H (11.4-12.6V) on address A_9 with V_{PP} pin at V_{DD} (4.5-5.5V) or V_{SS}. To activate this mode for SST27SF512, the programming equipment must force V_H (11.4-12.6V) on address A_9 with OE#/V_{PP} pin at V_{IL}. Two identifier bytes may then be sequenced from the device outputs by toggling address line A_0. For details, see Tables 3, 4, and 5 for hardware operation.

TABLE 1: PRODUCT IDENTIFICATION

	Address	Data
Manufacturer's ID	0000H	BFH
Device ID		
SST27SF256	0001H	A3H
SST27SF512	0001H	A4H
SST27SF010	0001H	A5H
SST27SF020	0001H	A6H

T1.1 1152

FUNCTIONAL BLOCK DIAGRAM OF THE SST27SF256

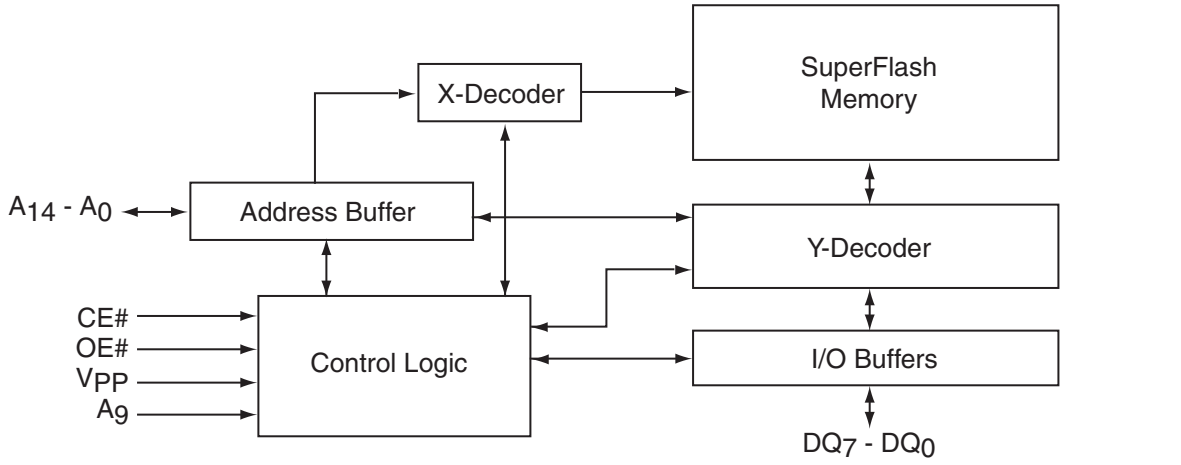

1152 B1.1

FUNCTIONAL BLOCK DIAGRAM OF THE SST27SF512

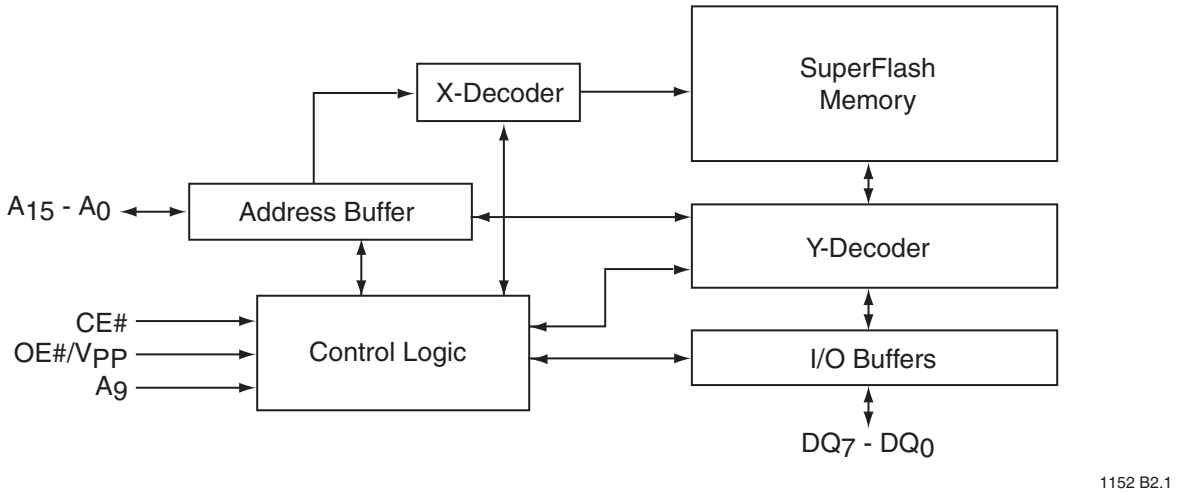

FUNCTIONAL BLOCK DIAGRAM OF THE SST27SF010/020

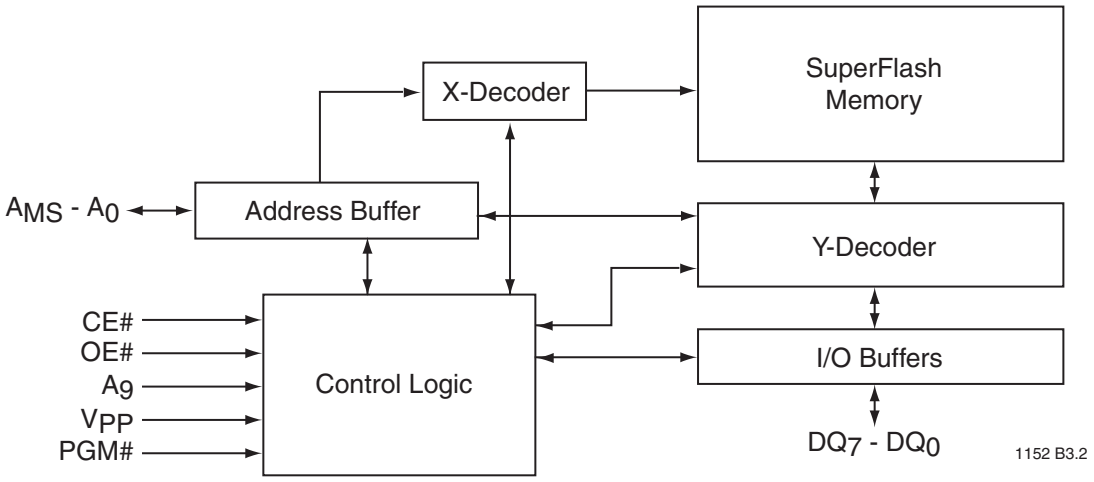

A_{MS} = A_{17} for SST27SF020, A_{16} for SST27SF010

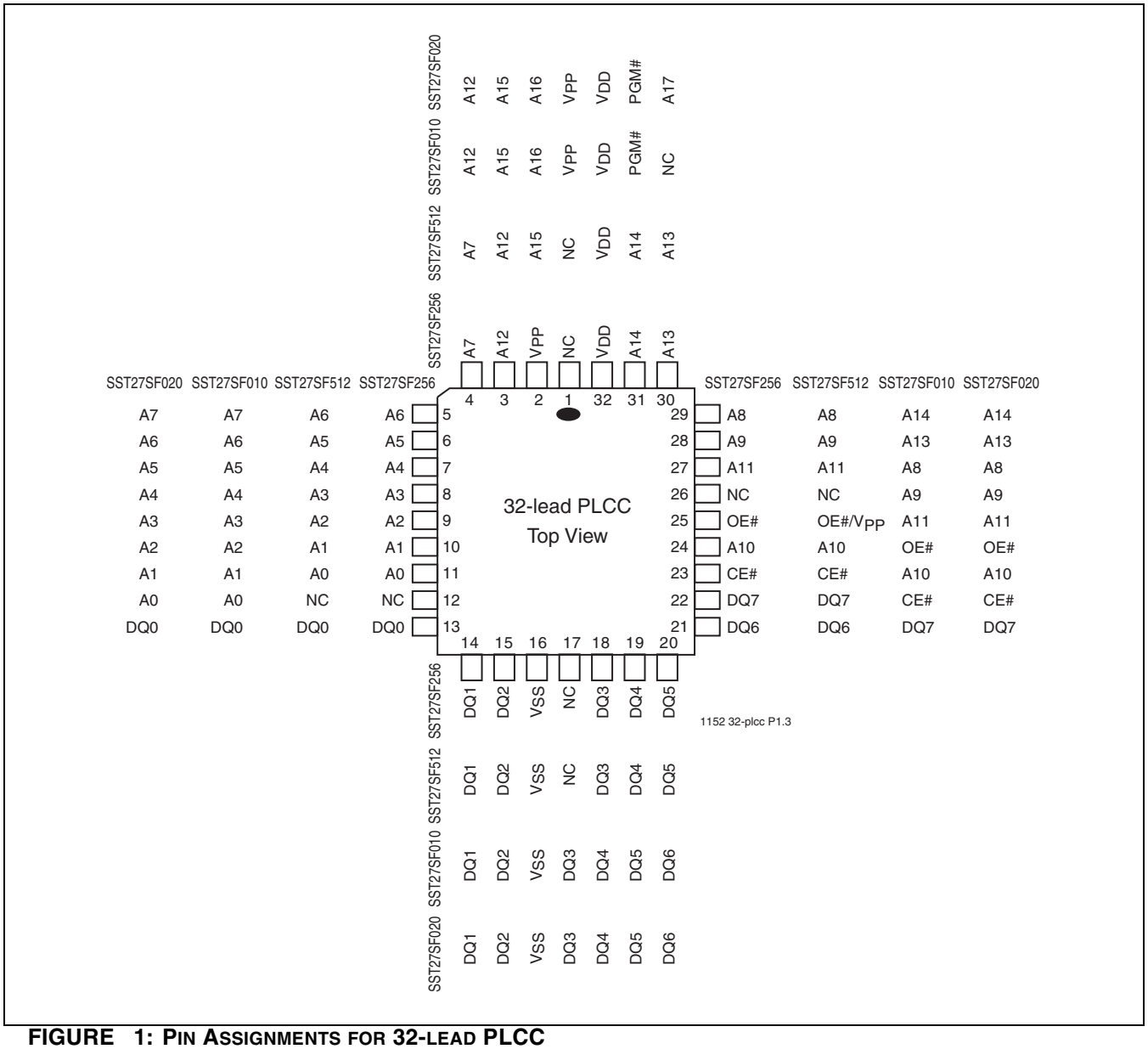

FIGURE 1: PIN ASSIGNMENTS FOR 32-LEAD PLCC

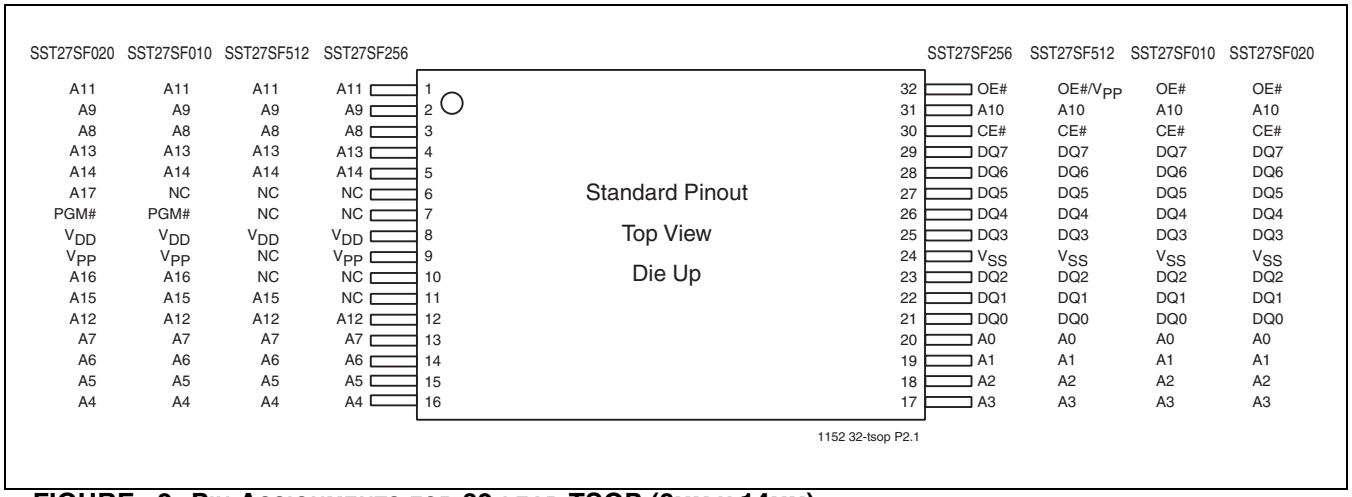

FIGURE 2: PIN ASSIGNMENTS FOR 32-LEAD TSOP (8MM X 14MM)

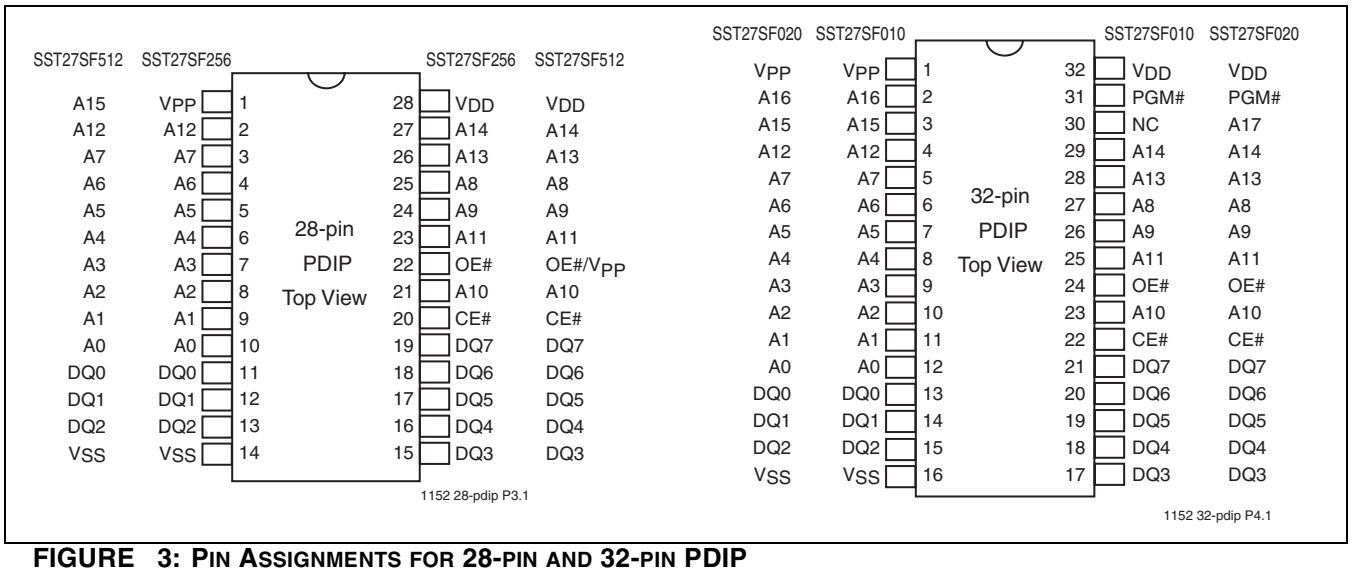

FIGURE 3: PIN ASSIGNMENTS FOR 28-PIN AND 32-PIN PDIP

TABLE 2: PIN DESCRIPTION

Symbol	Pin Name	Functions
A_{MS}[1]-A_0	Address Inputs	To provide memory addresses
DQ_7-DQ_0	Data Input/output	To output data during Read cycles and receive input data during Program cycles The outputs are in tri-state when OE# or CE# is high.
CE#	Chip Enable	To activate the device when CE# is low
OE#	Output Enable	For SST27SF256/010/020, to gate the data output buffers during Read operation
OE#/V_{PP}	Output Enable/V_{PP}	For SST27SF512, to gate the data output buffers during Read operation and high voltage pin during Chip-Erase and programming operation
V_{PP}	Power Supply for Program or Erase	For SST27SF256/010/020, high voltage pin during Chip-Erase and programming operation 11.4-12.6V
V_{DD}	Power Supply	To provide 5.0V supply (4.5-5.5V)
V_{SS}	Ground	
NC	No Connection	Unconnected pins.

T2.4 1152

1. A_{MS} = Most significant address
   A_{MS} = A_{14} for SST27SF256, A_{15} for SST27SF512, A_{16} for SST27SF010, and A_{17} for SST27SF020

TABLE 3: OPERATION MODES SELECTION FOR SST27SF256

Mode	CE#	OE#	V_{PP}	A_9	DQ	Address
Read	V_{IL}	V_{IL}	V_{DD} or V_{SS}	A_{IN}	D_{OUT}	A_{IN}
Output Disable	V_{IL}	V_{IH}	V_{DD} or V_{SS}	X[1]	High Z	X
Byte-Program	V_{IL}	V_{IH}	V_{PPH}	A_{IN}	D_{IN}	A_{IN}
Standby	V_{IH}	X	V_{DD} or V_{SS}	X	High Z	X
Chip-Erase	V_{IL}	V_{IH}	V_{PPH}	V_H	High Z	X
Program/Erase Inhibit	V_{IH}	X	V_{PPH}	X	High Z	X
Product Identification	V_{IL}	V_{IL}	V_{DD} or V_{SS}	V_H	Manufacturer's ID (BFH) Device ID (A3H)	A_{14}-A_1=V_{IL}, A_0=V_{IL} A_{14}-A_1=V_{IL}, A_0=V_{IH}

T3.2 1152

1. X can be V_{IL} or V_{IH}, but no other value.

Note: V_{PPH} = 11.4-12.6V, V_H = 11.4-12.6V

TABLE 4: OPERATION MODES SELECTION FOR SST27SF512

Mode	CE#	OE#/V_{PP}	A_9	DQ	Address
Read	V_{IL}	V_{IL}	A_{IN}	D_{OUT}	A_{IN}
Output Disable	V_{IL}	V_{IH}	X[1]	High Z	X
Program	V_{IL}	V_{PPH}	A_{IN}	D_{IN}	A_{IN}
Standby	V_{IH}	X	X	High Z	X
Chip-Erase	V_{IL}	V_{PPH}	V_H	High Z	X
Program/Erase Inhibit	V_{IH}	V_{PPH}	X	High Z	X
Product Identification	V_{IL}	V_{IL}	V_H	Manufacturer's ID (BFH) Device ID (A4H)	A_{15}-A_1=V_{IL}, A_0=V_{IL} A_{15}-A_1=V_{IL}, A_0=V_{IH}

T4.2 1152

1. X can be V_{IL} or V_{IH}, but no other value.

Note: V_{PPH} = 11.4-12.6V, V_H = 11.4-12.6V

©2003 Silicon Storage Technology, Inc.

TABLE 5: OPERATION MODES SELECTION FOR SST27SF010/020

Mode	CE#	OE#	PGM#	A_9	V_{PP}	DQ	Address
Read	V_{IL}	V_{IL}	X[1]	A_{IN}	V_{DD} or V_{SS}	D_{OUT}	A_{IN}
Output Disable	V_{IL}	V_{IH}	X	X	V_{DD} or V_{SS}	High Z	A_{IN}
Program	V_{IL}	V_{IH}	V_{IL}	A_{IN}	V_{PPH}	D_{IN}	A_{IN}
Standby	V_{IH}	X	X	X	V_{DD} or V_{SS}	High Z	X
Chip-Erase	V_{IL}	V_{IH}	V_{IL}	V_H	V_{PPH}	High Z	X
Program/Erase Inhibit	V_{IH}	X	X	X	V_{PPH}	High Z	X
Product Identification	V_{IL}	V_{IL}	X	V_H	V_{DD} or V_{SS}	Manufacturer's ID (BFH) Device ID[2]	A_{MS}[3] - A_1=V_{IL}, A_0=V_{IL} A_{MS}[3] - A_1=V_{IL}, A_0=V_{IH}

T5.2 1152

1. X can be V_{IL} or V_{IH}, but no other value.
2. Device ID = A5H for SST27SF010 and A6H for SST27SF020
3. A_{MS} = Most significant address
   A_{MS} = A_{16} for SST27SF010 and A_{17} for SST27SF020

Note: V_{PPH} = 11.4-12.6V, V_H = 11.4-12.6V

Absolute Maximum Stress Ratings (Applied conditions greater than those listed under "Absolute Maximum Stress Ratings" may cause permanent damage to the device. This is a stress rating only and functional operation of the device at these conditions or conditions greater than those defined in the operational sections of this data sheet is not implied. Exposure to absolute maximum stress rating conditions may affect device reliability.)

Temperature Under Bias . . . . . -55°C to +125°C
Storage Temperature . . . . . -65°C to +150°C
D. C. Voltage on Any Pin to Ground Potential . . . . . -0.5V to V_{DD}+0.5V
Transient Voltage (<20 ns) on Any Pin to Ground Potential . . . . . -2.0V to V_{DD}+2.0V
Voltage on A_9 and V_{PP} Pin to Ground Potential . . . . . -0.5V to 14.0V
Package Power Dissipation Capability (Ta = 25°C) 1.0W
Through Hold Lead Soldering Temperature (10 Seconds) . . . . . 300°C
Surface Mount Lead Soldering Temperature (3 Seconds) . . . . . 240°C
Output Short Circuit Current[1] . . . . . 100 mA

1. Outputs shorted for no more than one second. No more than one output shorted at a time.

OPERATING RANGE

Range	Ambient Temp	V_{DD}	V_{PP}
Commercial	0°C to +70°C	4.5-5.5V	11.4-12.6V

AC CONDITIONS OF TEST

Input Rise/Fall Time . . . . . 10 ns
Output Load . . . . . C_L = 100 pF for 90 ns
Output Load . . . . . C_L = 30 pF for 70 ns
See Figures 11 and 12

©2003 Silicon Storage Technology, Inc.

TABLE 6: READ MODE DC OPERATING CHARACTERISTICS FOR SST27SF256/512/010/020
V_{DD} = 4.5-5.5V, V_{PP}=V_{DD} OR V_{SS} (Ta = 0°C to +70°C (Commercial))

Symbol	Parameter	Limits			Test Conditions
		Min	Max	Units	
I_{DD}	V_{DD} Read Current				Address input=V_{ILT}/V_{IHT} at f=1/T_{RC} Min V_{DD}=V_{DD} Max
			30	mA	CE#=OE#=V_{IL}, all I/Os open
I_{PPR}	V_{PP} Read Current				Address input=V_{ILT}/V_{IHT} at f=1/T_{RC} Min V_{DD}=V_{DD} Max, V_{PP}=V_{DD}
			100	µA	CE#=OE#=V_{IL}, all I/Os open
I_{SB1}	Standby V_{DD} Current (TTL input)		3	mA	CE#=V_{IH}, V_{DD}=V_{DD} Max
I_{SB2}	Standby V_{DD} Current (CMOS input)		100	µA	CE#=V_{DD}-0.3 V_{DD}=V_{DD} Max
I_{LI}	Input Leakage Current		1	µA	V_{IN}=GND to V_{DD}, V_{DD}=V_{DD} Max
I_{LO}	Output Leakage Current		10	µA	V_{OUT}=GND to V_{DD}, V_{DD}=V_{DD} Max
V_{IL}	Input Low Voltage		0.8	V	V_{DD}=V_{DD} Min
V_{IH}	Input High Voltage	2.0	V_{DD}+0.5	V	V_{DD}=V_{DD} Max
V_{OL}	Output Low Voltage		0.2	V	I_{OL}=2.1 mA, V_{DD}=V_{DD} Min
V_{OH}	Output High Voltage	2.4		V	I_{OH}=-400 µA, V_{DD}=V_{DD} Min
I_H	Supervoltage Current for A_9		200	µA	CE#=OE#=V_{IL}, A_9=V_H Max

T6.6 1152

TABLE 7: PROGRAM/ERASE DC OPERATING CHARACTERISTICS FOR SST27SF256
V_{DD}=4.5-5.5V, V_{PP}=V_{PPH} (Ta=25°C±5°C)

Symbol	Parameter	Limits			Test Conditions
		Min	Max	Units	
I_{DD}	V_{DD} Erase or Program Current		30	mA	CE#=V_{IL}, OE#=V_{IH}, V_{PP}=11.4-12.6V, V_{DD}=V_{DD} Max
I_{PP}	V_{PP} Erase or Program Current		1	mA	CE#=V_{IL}, OE#=V_{IH}, V_{PP}=11.4-12.6V, V_{DD}=V_{DD} Max
I_{LI}	Input Leakage Current		1	µA	V_{IN}=GND to V_{DD}, V_{DD}=V_{DD} Max
I_{LO}	Output Leakage Current		10	µA	V_{OUT}=GND to V_{DD}, V_{DD}=V_{DD} Max
V_H	Supervoltage for A_9	11.4	12.6	V	CE#=OE#=V_{IL},
I_H	Supervoltage Current for A_9		200	µA	CE#=OE#=V_{IL}, A_9=V_H Max
V_{PPH}	High Voltage for V_{PP} Pin	11.4	12.6	V	

T7.4 1152

©2003 Silicon Storage Technology, Inc.

TABLE 8: PROGRAM/ERASE DC OPERATING CHARACTERISTICS FOR SST27SF512
V_{DD}=4.5-5.5V, V_{PP}=V_{PPH} (Ta=25°C±5°C)

Symbol	Parameter	Limits Min	Limits Max	Limits Units	Test Conditions
I_{DD}	V_{DD} Erase or Program Current		30	mA	CE#=V_{IL}, OE#/V_{PP}=11.4-12.6V, V_{DD}=V_{DD} Max
I_{PP}	V_{PP} Erase or Program Current		1	mA	CE#=V_{IL}, OE#/V_{PP}=11.4-12.6V, V_{DD}=V_{DD} Max
I_{LI}	Input Leakage Current		1	µA	V_{IN}=GND to V_{DD}, V_{DD}=V_{DD} Max
I_{LO}	Output Leakage Current		10	µA	V_{OUT}=GND to V_{DD}, V_{DD}=V_{DD} Max
V_H	Supervoltage for A_9	11.4	12.6	V	CE#=OE#/V_{PP}=V_{IL},
I_H	Supervoltage Current for A_9		200	µA	CE#=OE#/V_{PP}=V_{IL}, A_9=V_H Max
V_{PPH}	High Voltage for OE#/V_{PP} Pin	11.4	12.6	V	

T8.4 1152

TABLE 9: PROGRAM/ERASE DC OPERATING CHARACTERISTICS FOR SST27SF010/020
V_{DD}=4.5-5.5V, V_{PP}=V_{PPH} (Ta=25°C±5°C)

Symbol	Parameter	Limits Min	Limits Max	Limits Units	Test Conditions
I_{DD}	V_{DD} Erase or Program Current		30	mA	CE#=PGM#=V_{IL}, OE#=V_{IH}, V_{PP}=11.4-12.6V, V_{DD}=V_{DD} Max
I_{PP}	V_{PP} Erase or Program Current		1	mA	CE#=PGM#=V_{IL}, OE#=V_{IH}, V_{PP}=11.4-12.6V, V_{DD}=V_{DD} Max
I_{LI}	Input Leakage Current		1	µA	V_{IN} =GND to V_{DD}, V_{DD}=V_{DD} Max
I_{LO}	Output Leakage Current		10	µA	V_{OUT} =GND to V_{DD}, V_{DD}=V_{DD} Max
V_H	Supervoltage for A_9	11.4	12.6	V	CE#=OE#=V_{IL},
I_H	Supervoltage Current for A_9		200	µA	CE#=OE#=V_{IL}, A_9=V_H Max
V_{PPH}	High Voltage for V_{PP} Pin	11.4	12.6	V	

T9.4 1152

TABLE 10: RECOMMENDED SYSTEM POWER-UP TIMINGS

Symbol	Parameter	Minimum	Units
$T_{PU-READ}$[1]	Power-up to Read Operation	100	µs
$T_{PU-WRITE}$[1]	Power-up to Write Operation	100	µs

T10.1 1152

1. This parameter is measured only for initial qualification and after a design or process change that could affect this parameter.

TABLE 11: CAPACITANCE (Ta = 25°C, f=1 Mhz, other pins open)

Parameter	Description	Test Condition	Maximum
$C_{I/O}$[1]	I/O Pin Capacitance	$V_{I/O}$ = 0V	12 pF
C_{IN}[1]	Input Capacitance	V_{IN} = 0V	6 pF

T11.0 1152

1. This parameter is measured only for initial qualification and after a design or process change that could affect this parameter.

©2003 Silicon Storage Technology, Inc.

TABLE 12: RELIABILITY CHARACTERISTICS

Symbol	Parameter	Minimum Specification	Units	Test Method
N_{END}[1]	Endurance	1000	Cycles	JEDEC Standard A117
T_{DR}[1]	Data Retention	100	Years	JEDEC Standard A103
I_{LTH}[1]	Latch Up	100	mA	JEDEC Standard 78

T12.2 1152

1. This parameter is measured only for initial qualification and after a design or process change that could affect this parameter.

AC CHARACTERISTICS

TABLE 13: READ CYCLE TIMING PARAMETERS V_{DD} = 4.5-5.5V (Ta = 0°C to +70°C (Commercial))

		SST27SF256-70 SST27SF512-70 SST27SF010-70 SST27SF020-70		SST27SF256-90 SST27SF512-90 SST27SF010-90 SST27SF020-90		
Symbol	Parameter	Min	Max	Min	Max	Units
T_{RC}	Read Cycle Time	70		90		ns
T_{CE}	Chip Enable Access Time		70		90	ns
T_{AA}	Address Access Time		70		90	ns
T_{OE}	Output Enable Access Time		35		45	ns
T_{CLZ}[1]	CE# Low to Active Output	0		0		ns
T_{OLZ}[1]	OE# Low to Active Output	0		0		ns
T_{CHZ}[1]	CE# High to High-Z Output		25		30	ns
T_{OHZ}[1]	OE# High to High-Z Output		25		30	ns
T_{OH}[1]	Output Hold from Address Change	0		0		ns

T13.2 1152

1. This parameter is measured only for initial qualification and after a design or process change that could affect this parameter.

TABLE 14: PROGRAM/ERASE CYCLE TIMING PARAMETERS FOR SST27SF256

Symbol	Parameter	Min	Max	Units
T_{AS}	Address Setup Time	1		µs
T_{AH}	Address Hold Time	1		µs
T_{PRT}	V_{PP} Pulse Rise Time	50		ns
T_{VPS}	V_{PP} Setup Time	1		µs
T_{VPH}	V_{PP} Hold Time	1		µs
T_{PW}	CE# Program Pulse Width	20	30	µs
T_{EW}	CE# Erase Pulse Width	100	500	ms
T_{DS}	Data Setup Time	1		µs
T_{DH}	Data Hold Time	1		µs
T_{VR}	V_{PP} and A_9 Recovery Time	1		µs
T_{ART}	A_9 Rise Time to 12V during Erase	50		ns
T_{A9S}	A_9 Setup Time during Erase	1		µs
T_{A9H}	A_9 Hold Time during Erase	1		µs

T14.0 1152

©2003 Silicon Storage Technology, Inc.

TABLE 15: PROGRAM/ERASE CYCLE TIMING PARAMETERS FOR SST27SF512

Symbol	Parameter	Min	Max	Units
T_{AS}	Address Setup Time	1		µs
T_{AH}	Address Hold Time	1		µs
T_{PRT}	OE#/V_{PP} Pulse Rise Time	50		ns
T_{VPS}	OE#/V_{PP} Setup Time	1		µs
T_{VPH}	OE#/V_{PP} Hold Time	1		µs
T_{PW}	CE# Program Pulse Width	20	30	µs
T_{EW}	CE# Erase Pulse Width	100	500	ms
T_{DS}	Data Setup Time	1		µs
T_{DH}	Data Hold Time	1		µs
T_{VR}	OE#/V_{PP} and A_9 Recovery Time	1		µs
T_{ART}	A_9 Rise Time to 12V during Erase	50		ns
T_{A9S}	A_9 Setup Time during Erase	1		µs
T_{A9H}	A_9 Hold Time during Erase	1		µs

T15.0 1152

TABLE 16: PROGRAM/ERASE CYCLE TIMING PARAMETERS FOR SST27SF010/020

Symbol	Parameter	Min	Max	Units
T_{CES}	CE# Setup Time	1		µs
T_{CEH}	CE# Hold Time	1		µs
T_{AS}	Address Setup Time	1		µs
T_{AH}	Address Hold Time	1		µs
T_{PRT}	V_{PP} Pulse Rise Time	50		ns
T_{VPS}	V_{PP} Setup Time	1		µs
T_{VPH}	V_{PP} Hold Time	1		µs
T_{PW}	PGM# Program Pulse Width	20	30	µs
T_{EW}	PGM# Erase Pulse Width	100	500	ms
T_{DS}	Data Setup Time	1		µs
T_{DH}	Data Hold Time	1		µs
T_{VR}	A_9 Recovery Time for Erase	1		µs
T_{ART}	A_9 Rise Time to 12V during Erase	50		ns
T_{A9S}	A_9 Setup Time during Erase	1		µs
T_{A9H}	A_9 Hold Time during Erase	1		µs

T16.0 1152

©2003 Silicon Storage Technology, Inc.

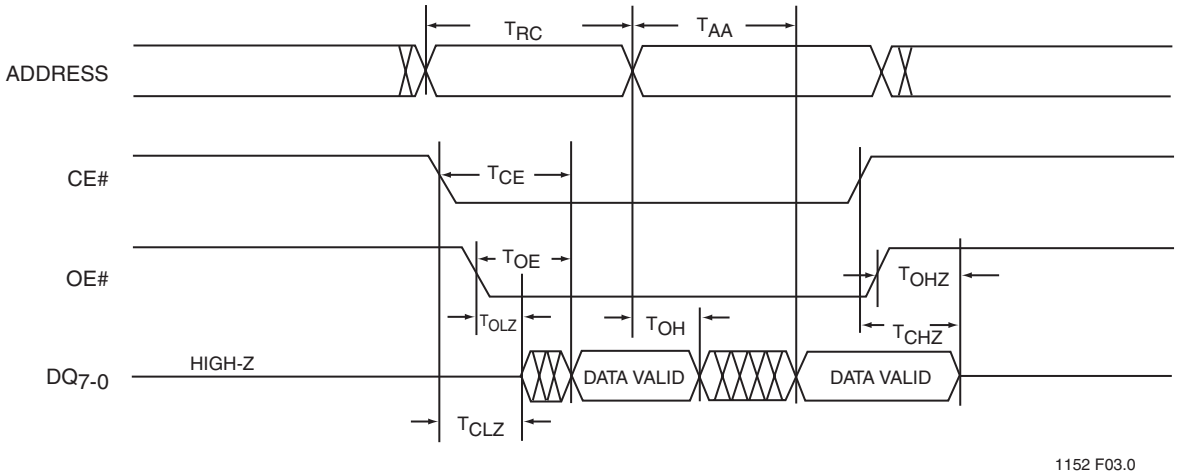

FIGURE 4: READ CYCLE TIMING DIAGRAM FOR SST27SF256/512/010/020

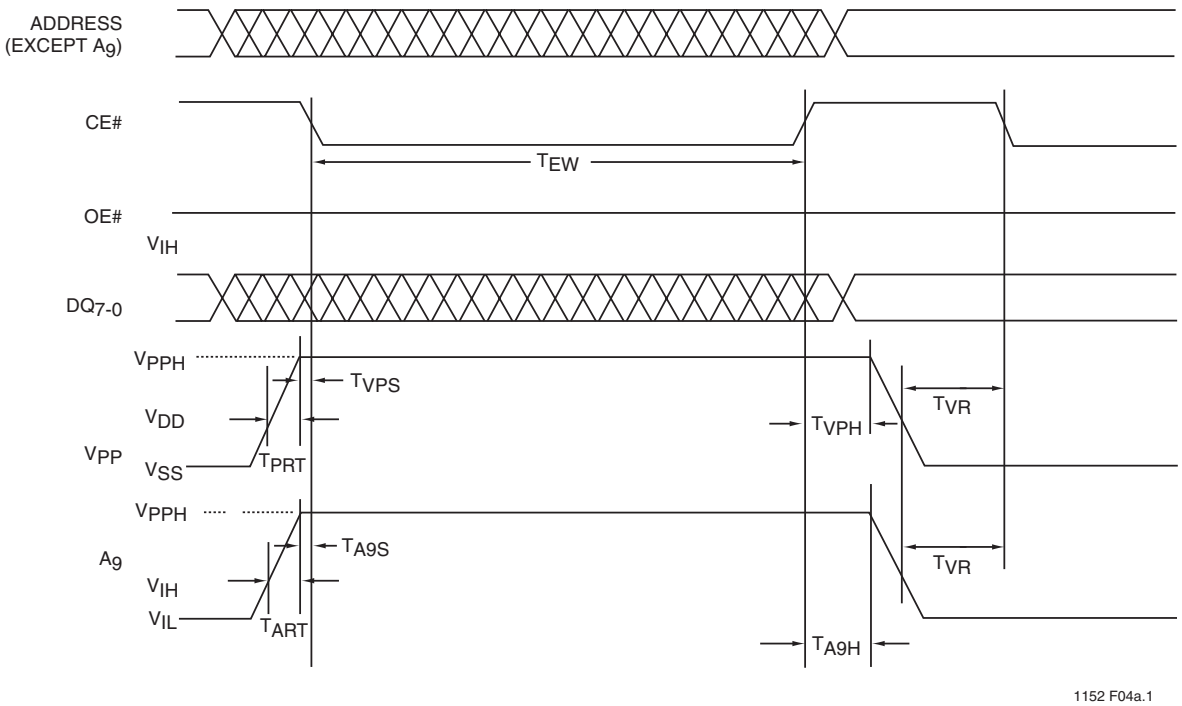

FIGURE 5: CHIP-ERASE TIMING DIAGRAM FOR SST27SF256

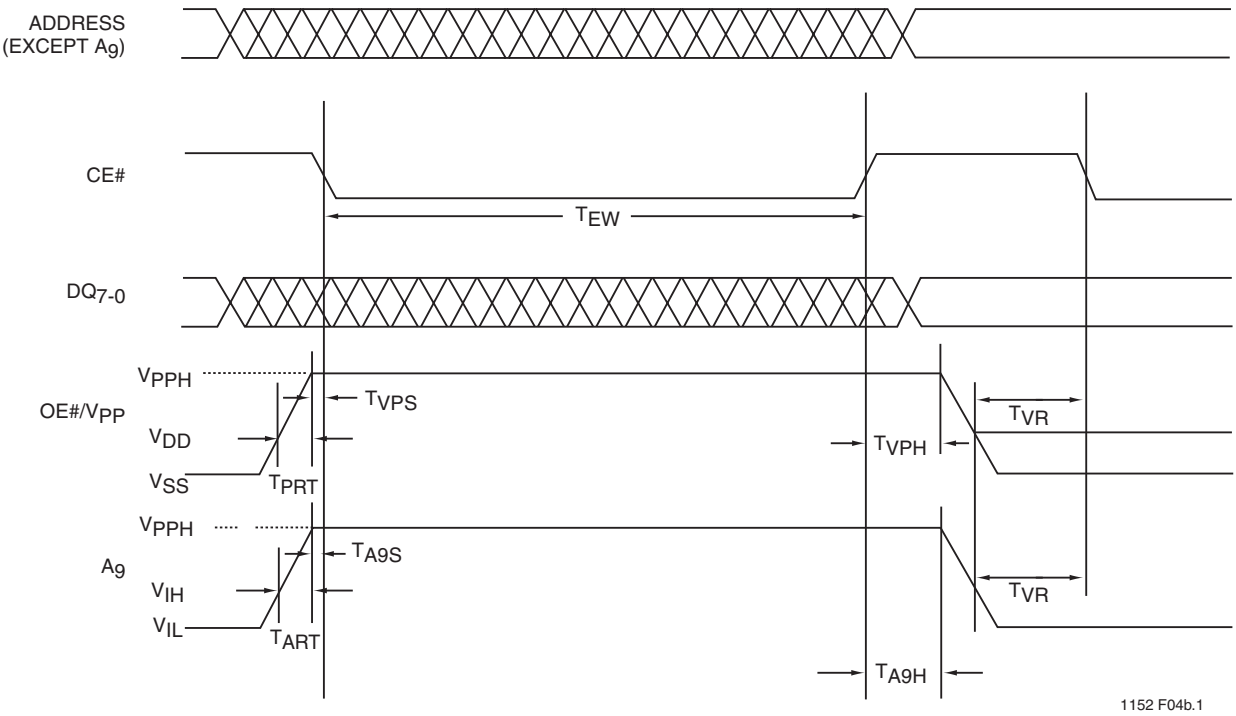

FIGURE 6: READ CYCLE TIMING DIAGRAM FOR SST27SF512

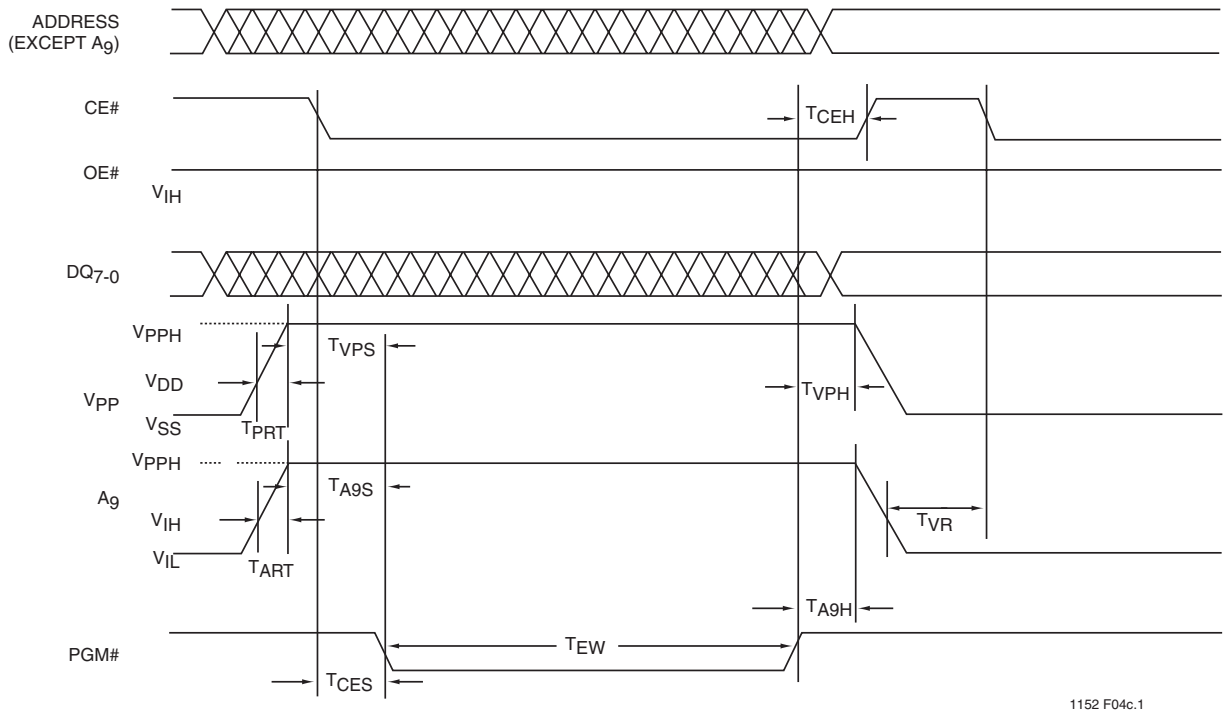

FIGURE 7: CHIP-ERASE TIMING DIAGRAM FOR SST27SF010/020

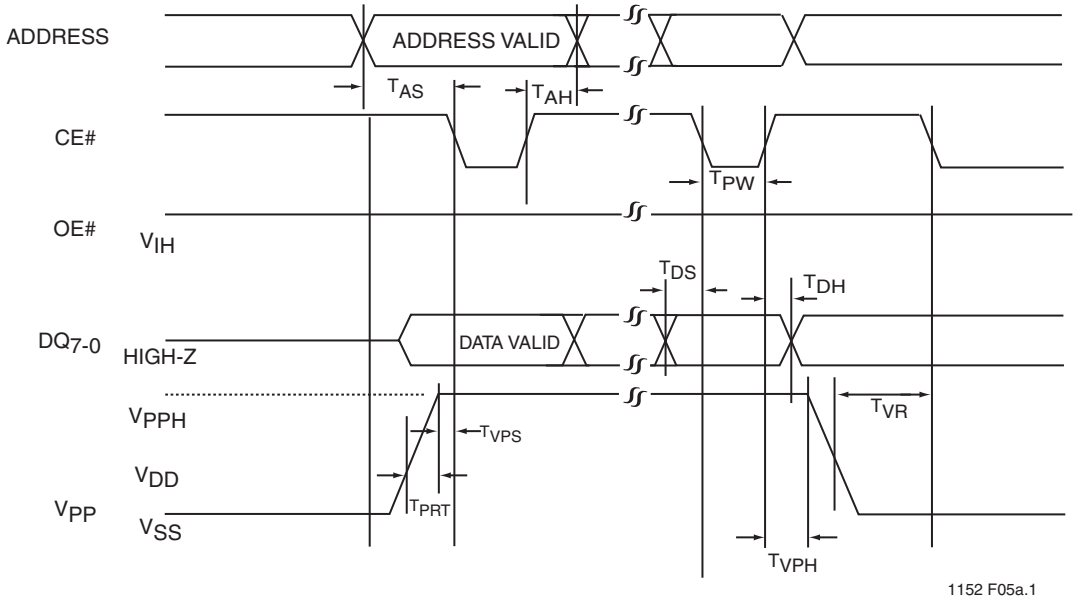

FIGURE 8: BYTE-PROGRAM TIMING DIAGRAM FOR SST27SF256

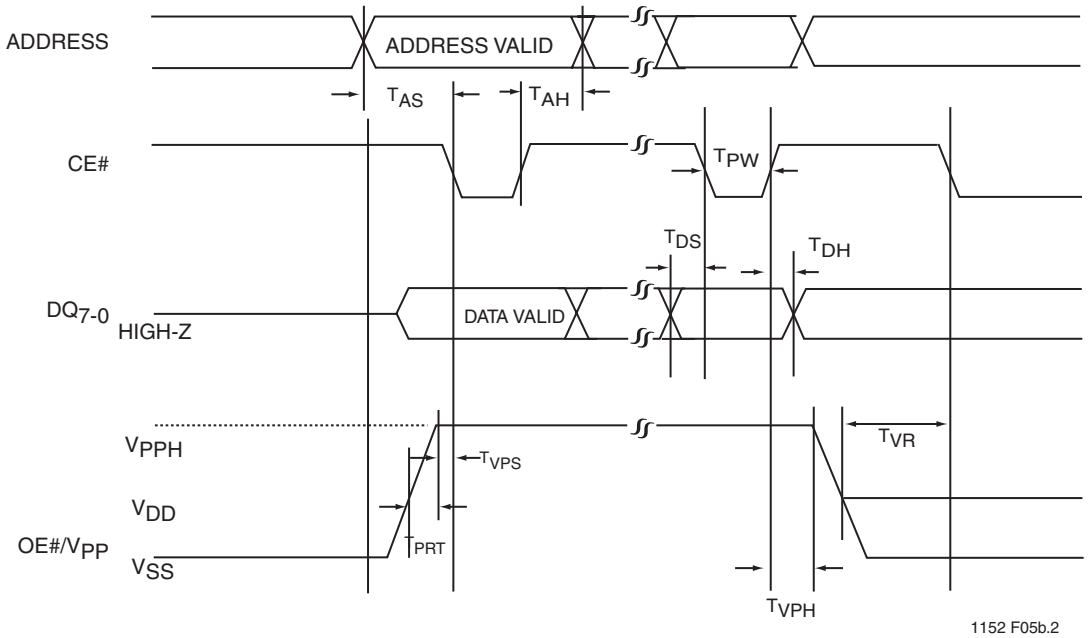

FIGURE 9: BYTE-PROGRAM TIMING DIAGRAM FOR SST27SF512

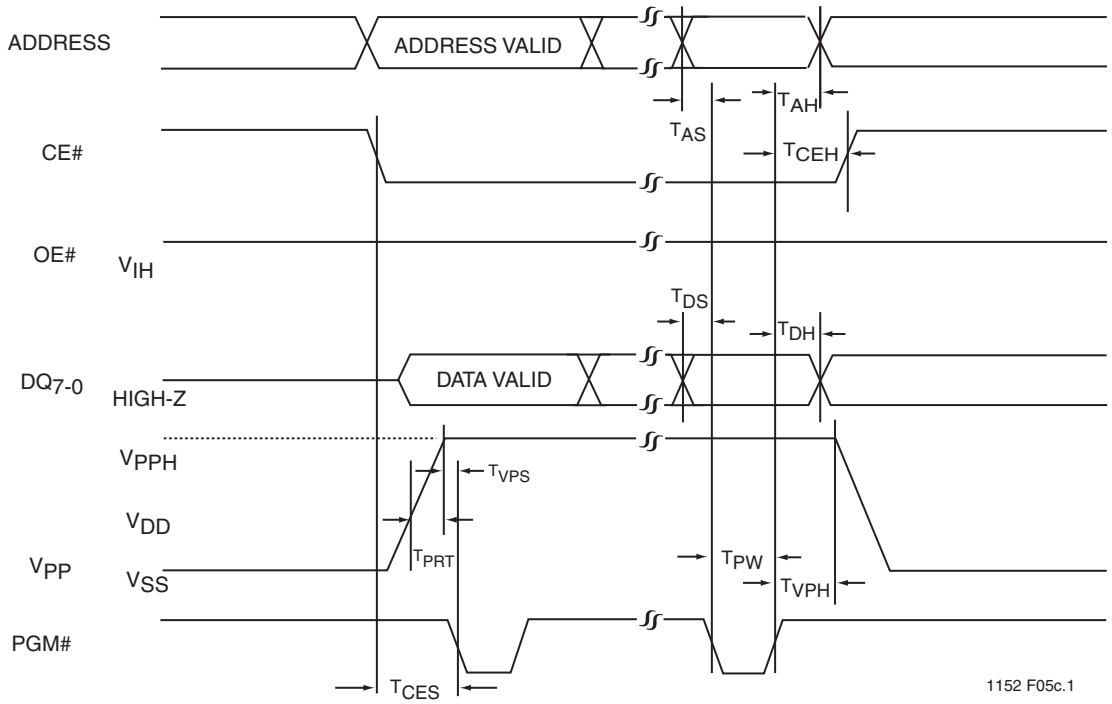

FIGURE 10: BYTE-PROGRAM TIMING DIAGRAM FOR SST27SF010/020

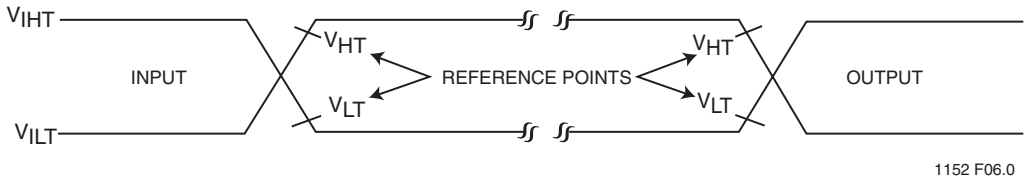

AC test inputs are driven at V_{IHT} (2.4 V) for a logic "1" and V_{ILT} (0.4 V) for a logic "0". Measurement reference points for inputs and outputs are V_{HT} (2.0 V) and V_{LT} (0.8 V). Input rise and fall times (10% ↔ 90%) are <10 ns.

Note: V_{HT} - V_{HIGH}Test
V_{LT} - V_{LOW} Test
V_{IHT} - V_{INPUT} HIGH Test
V_{ILT} - V_{INPUT} LOW Test

FIGURE 11: AC INPUT/OUTPUT REFERENCE WAVEFORMS

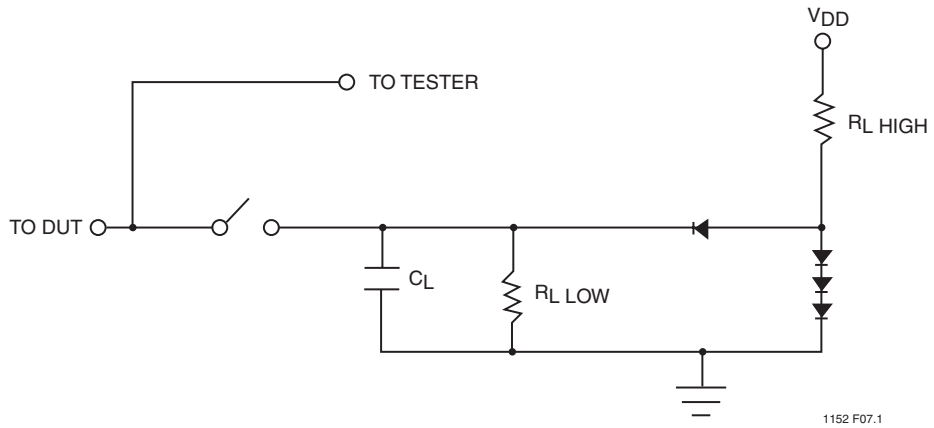

FIGURE 12: A TEST LOAD EXAMPLE

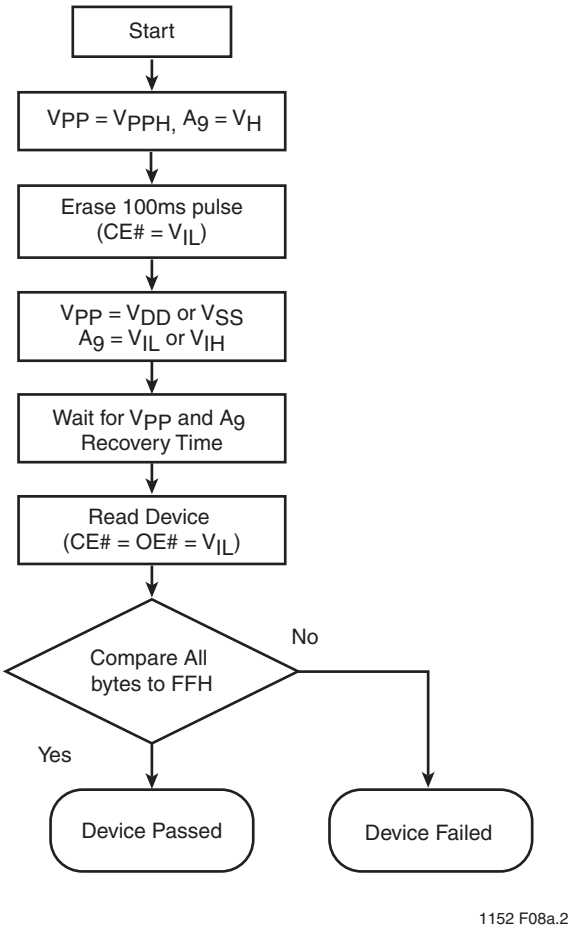

FIGURE 13: CHIP-ERASE ALGORITHM FOR SST27SF256

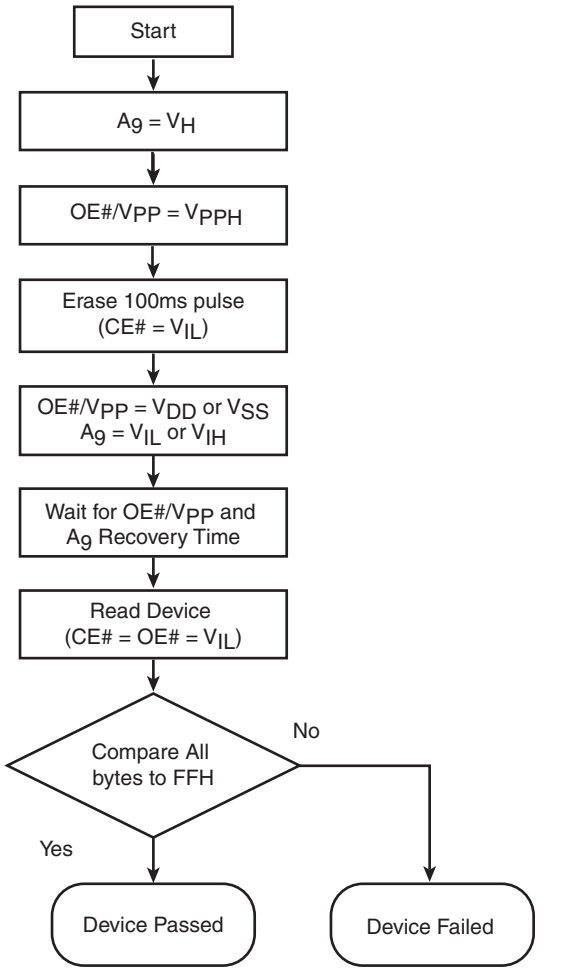

FIGURE 14: CHIP-ERASE ALGORITHM FOR SST27SF512

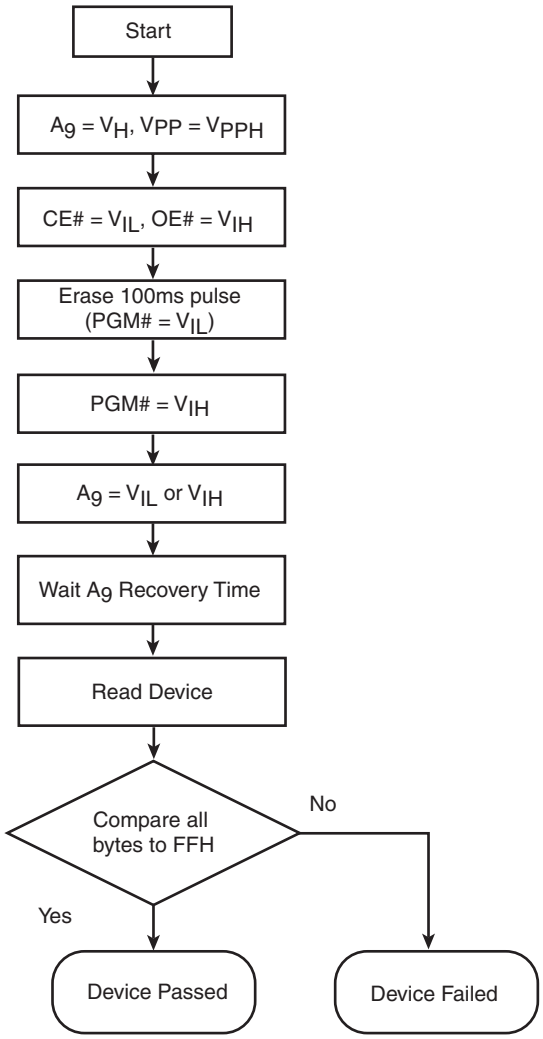

1152 F08c.1

FIGURE 15: CHIP-ERASE ALGORITHM FOR SST27SF010/020

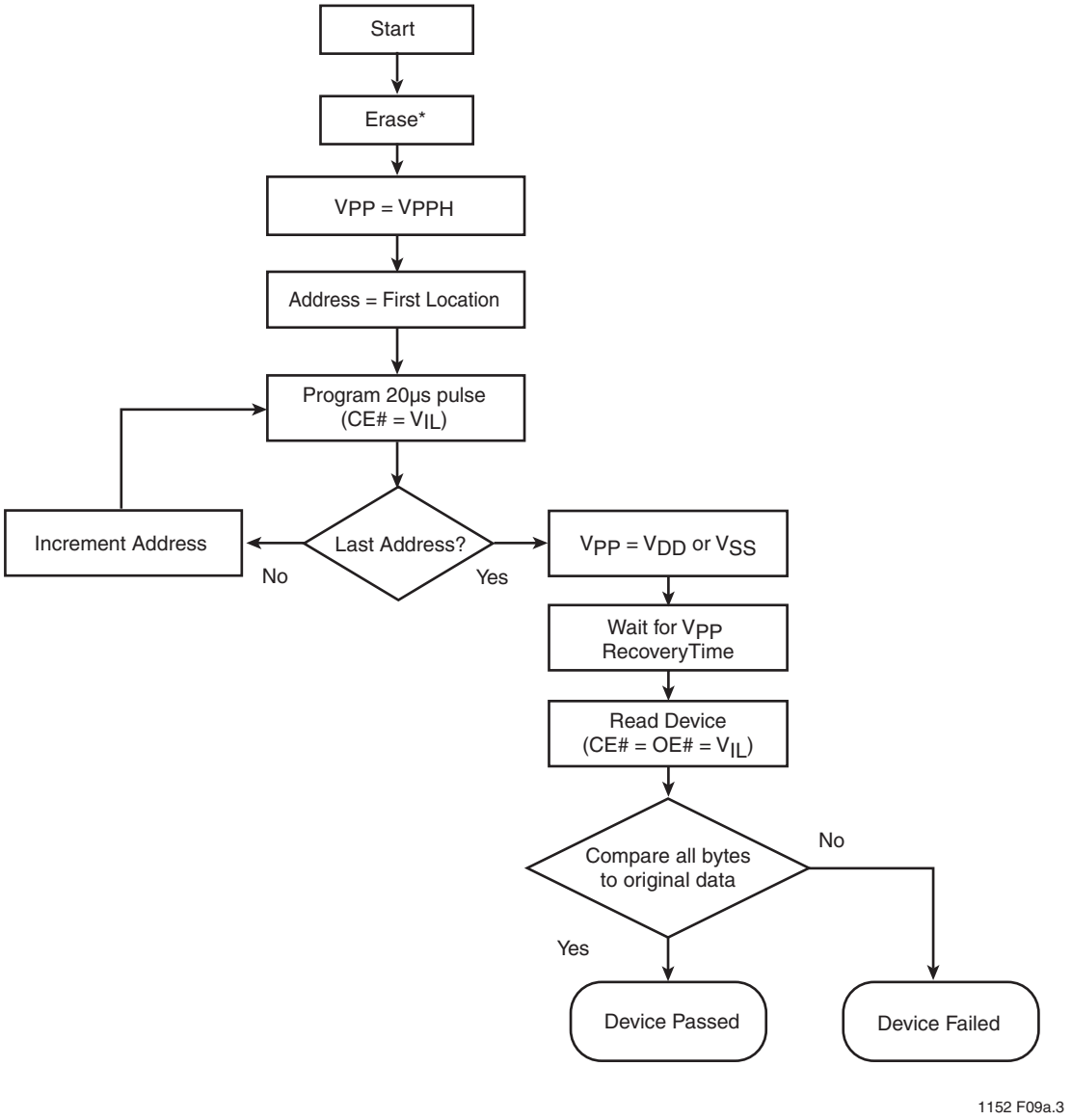

* See Figure 13

FIGURE 16: BYTE-PROGRAM ALGORITHM FOR SST27SF256

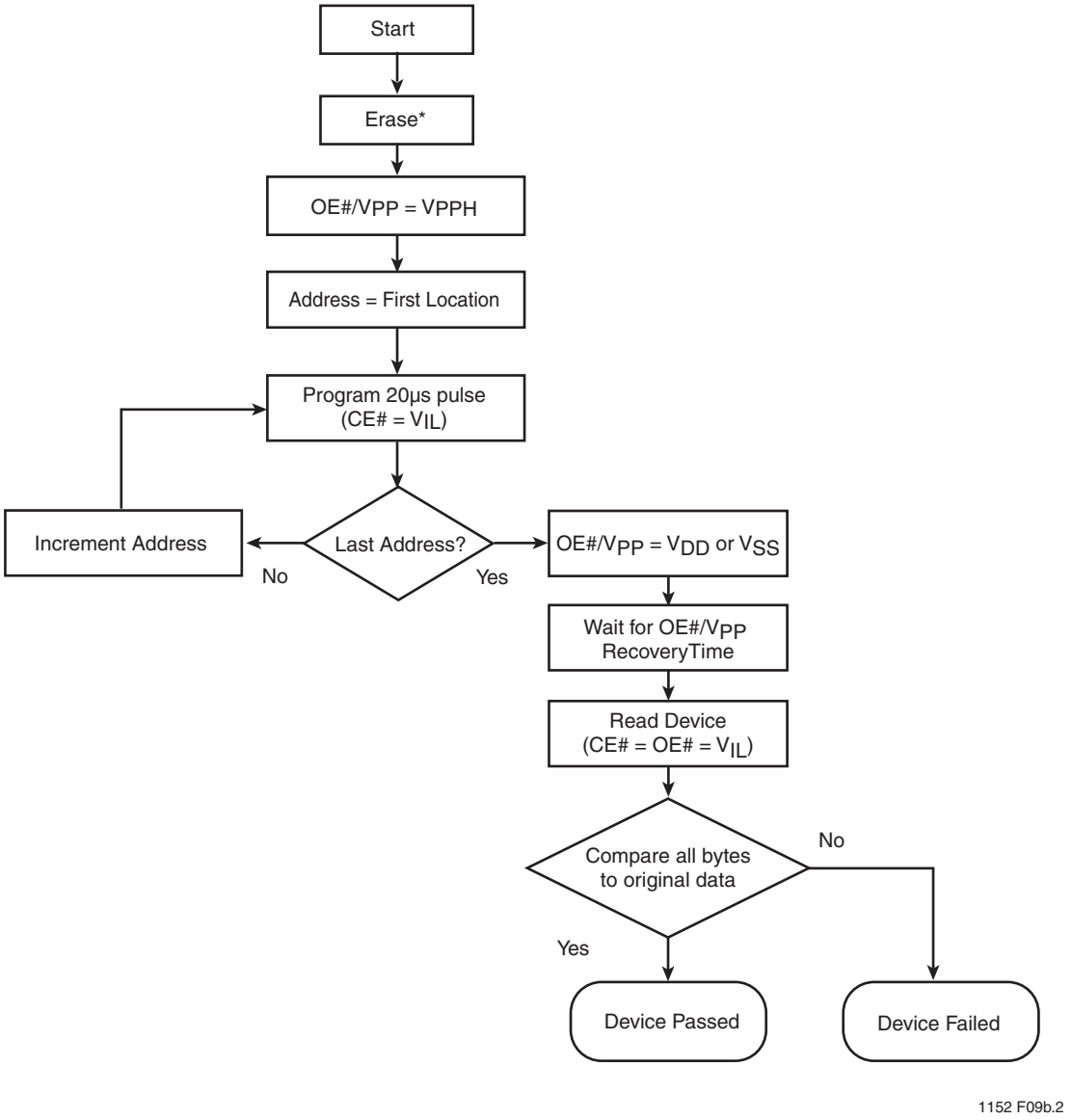

* See Figure 14

FIGURE 17: BYTE-PROGRAM ALGORITHM FOR SST27SF512

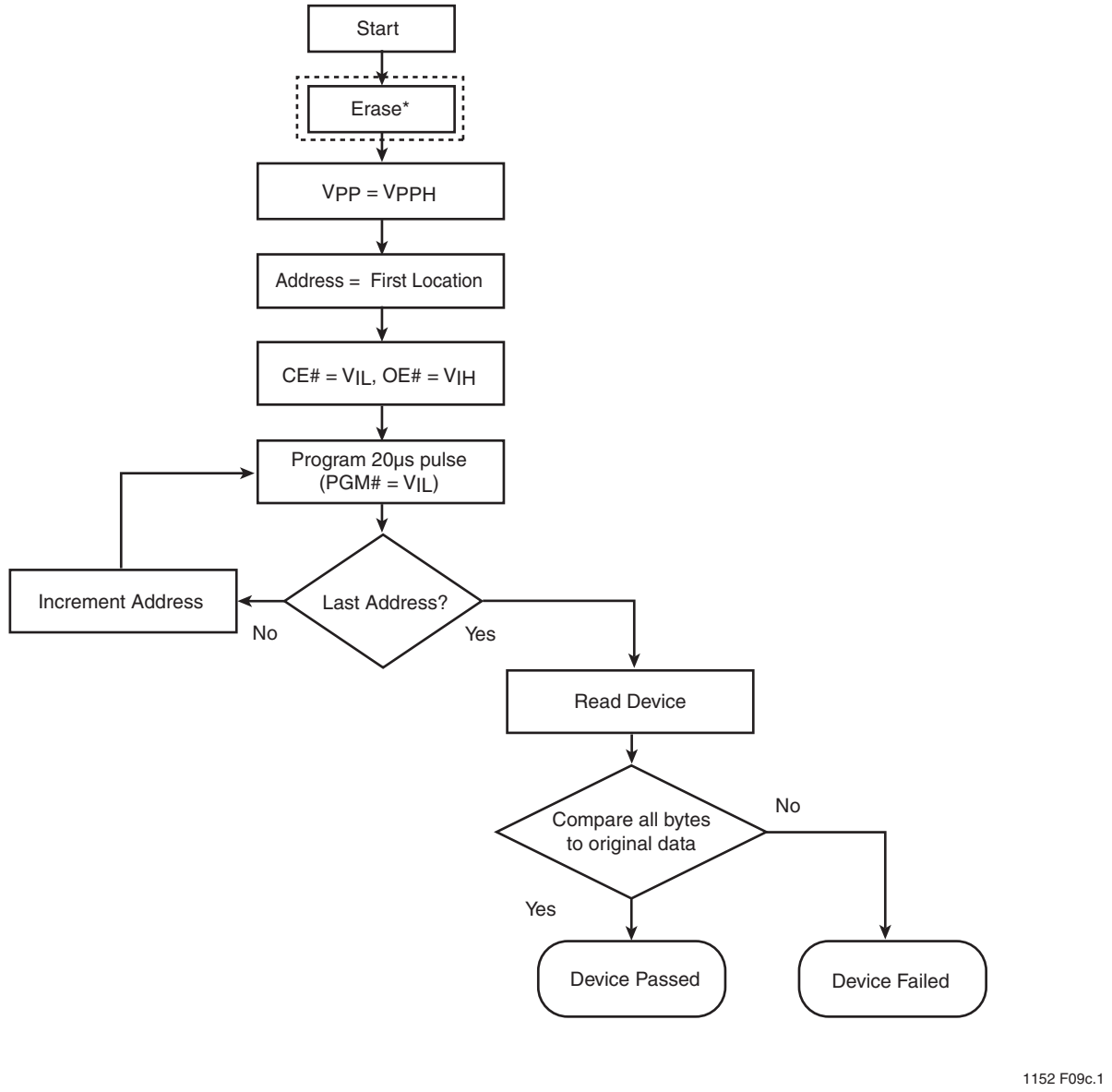

* See Figure 15

FIGURE 18: BYTE-PROGRAM ALGORITHM FOR SST27SF010/020.

PRODUCT ORDERING INFORMATION

Device	Speed	Suffix1	Suffix2
SST27SFxxx -	XXX -	XX -	XX

Package Modifier
G = 28 pins
H = 32 pins or leads

Package Type
N = PLCC
P = PDIP
W = TSOP (type 1, die up, 8mm x 14mm)

Temperature Range
C = Commercial = 0°C to +70°C

Minimum Endurance
3 = 1,000 cycles

Read Access Speed
70 = 70 ns
90 = 90 ns

Device Density
x8 Organization
020 = 2 Mbit
010 = 1 Mbit
512 = 512 Kbit
256 = 256 Kbit

Function
F = Chip-Erase
Byte-Program

Voltage Range
S = 4.5-5.5V

Device Family
27 = Many-Time Programmable Flash

©2003 Silicon Storage Technology, Inc.

Valid combinations for SST27SF256

SST27SF256-70-3C-NH	SST27SF256-70-3C-WH	SST27SF256-70-3C-PG
SST27SF256-90-3C-NH	SST27SF256-90-3C-WH	SST27SF256-90-3C-PG

Valid combinations for SST27SF512

SST27SF512-70-3C-NH	SST27SF512-70-3C-WH	SST27SF512-70-3C-PG
SST27SF512-90-3C-NH	SST27SF512-90-3C-WH	SST27SF512-90-3C-PG

Valid combinations for SST27SF010

SST27SF010-70-3C-NH	SST27SF010-70-3C-WH	SST27SF010-70-3C-PH
SST27SF010-90-3C-NH	SST27SF010-90-3C-WH	SST27SF010-90-3C-PH

Valid combinations for SST27SF020

SST27SF020-70-3C-NH	SST27SF020-70-3C-WH	SST27SF020-70-3C-PH
SST27SF020-90-3C-NH	SST27SF020-90-3C-WH	SST27SF020-90-3C-PH

Note: Valid combinations are those products in mass production or will be in mass production. Consult your SST sales representative to confirm availability of valid combinations and to determine availability of new combinations.

©2003 Silicon Storage Technology, Inc.

PACKAGING DIAGRAMS

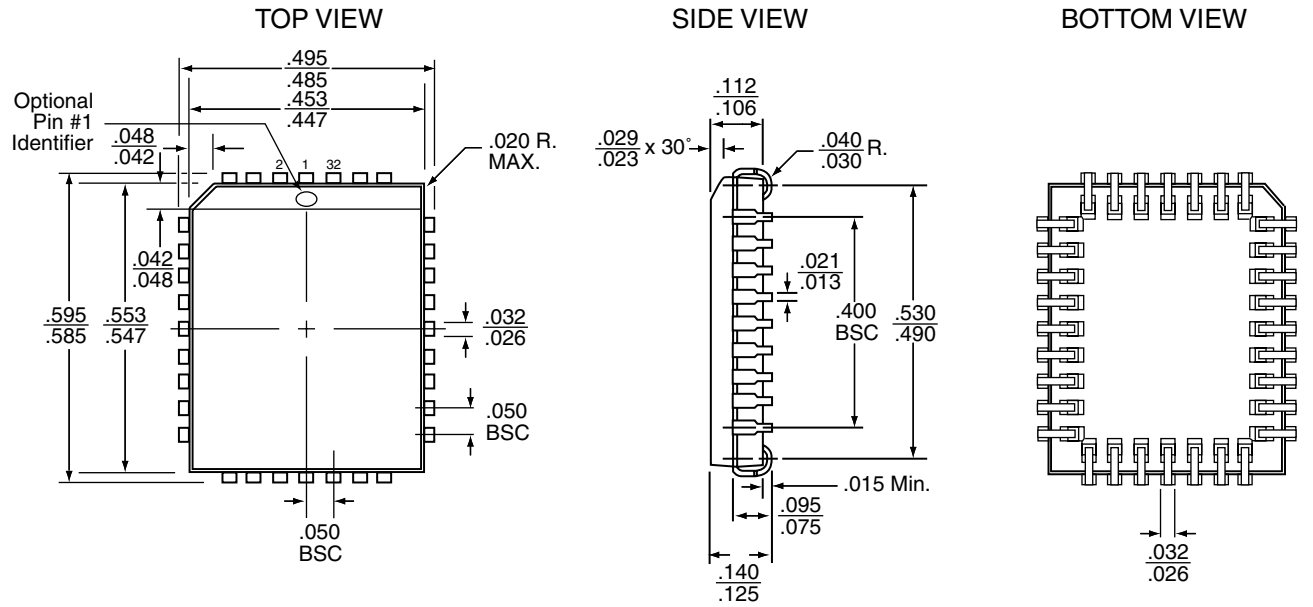

Note: 1. Complies with JEDEC publication 95 MS-016 AE dimensions, although some dimensions may be more stringent.
2. All linear dimensions are in inches (max/min).
3. Dimensions do not include mold flash. Maximum allowable mold flash is .008 inches.
4. Coplanarity: 4 mils.

32-plcc-NH-3

32-LEAD PLASTIC LEAD CHIP CARRIER (PLCC)
SST PACKAGE CODE: NH

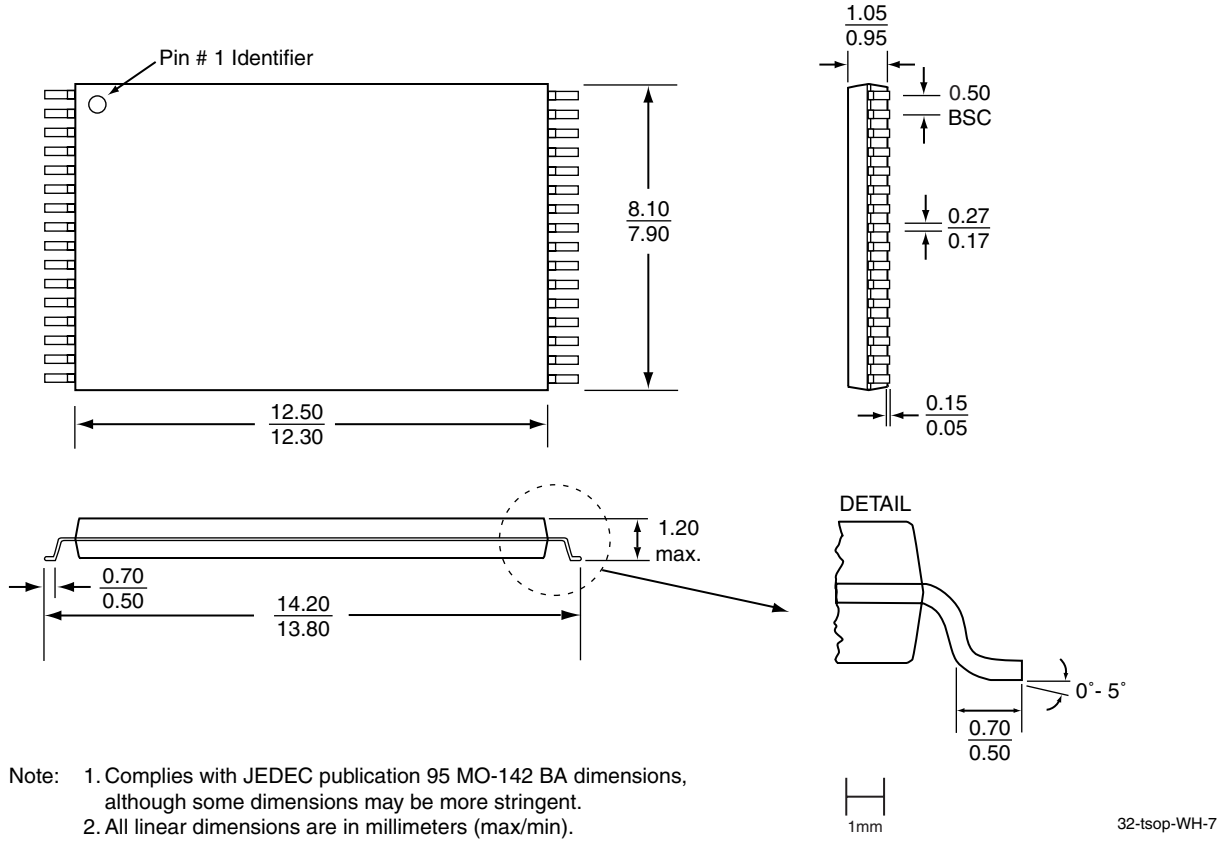

Note: 1. Complies with JEDEC publication 95 MO-142 BA dimensions, although some dimensions may be more stringent.
2. All linear dimensions are in millimeters (max/min).
3. Coplanarity: 0.1 mm
4. Maximum allowable mold flash is 0.15 mm at the package ends, and 0.25 mm between leads.

32-LEAD THIN SMALL OUTLINE PACKAGE (TSOP) 8MM X 14MM
SST PACKAGE CODE: WH

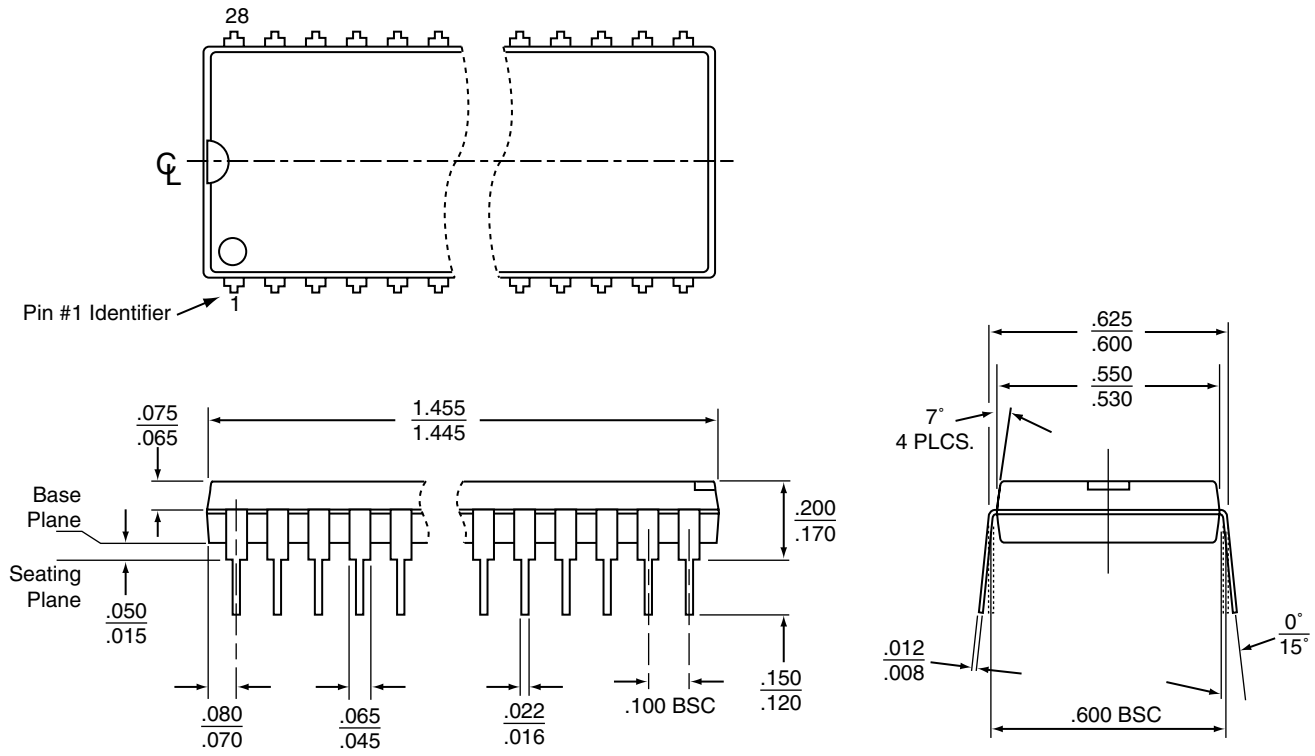

Note: 1. Complies with JEDEC publication 95 MO-015 AH dimensions, although some dimensions may be more stringent.
2. All linear dimensions are in inches (max/min).
3. Dimensions do not include mold flash. Maximum allowable mold flash is .010 inches.

28-pdip-PG-3

28-PIN PLASTIC DUAL IN-LINE PINS (PDIP)
SST PACKAGE CODE: PG

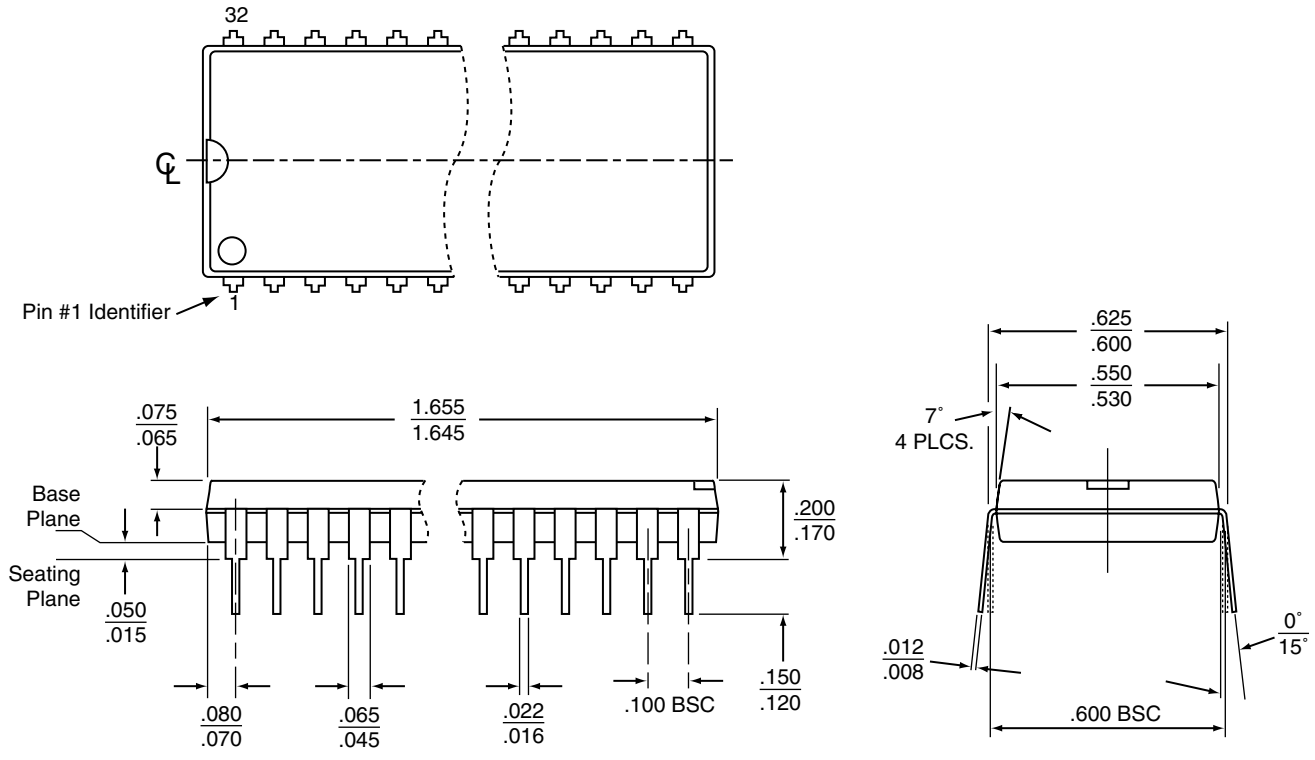

Note: 1. Complies with JEDEC publication 95 MO-015 AP dimensions, although some dimensions may be more stringent.
2. All linear dimensions are in inches (max/min).
3. Dimensions do not include mold flash. Maximum allowable mold flash is .010 inches.

32-pdip-PH-3

32-PIN PLASTIC DUAL IN-LINE PINS (PDIP)
SST PACKAGE CODE: PH

Revision History

Number	Description	Date
02	• 2002 Data Book	Feb 2002
03	• Document Control Release (SST Internal): No technical changes	Apr 2002
04	• Corrected I_H Supervoltage Current for A_9 from 100µA to 200µA in Tables 6, 7, 8, and 9	Jul 2002
05	• Corrected the Test Conditions for I_{DD} and I_{PPR} in Table 6 on page 8	Sep 2003

©2003 Silicon Storage Technology, Inc.