L5510

HIGHLY INTEGRATED, AUTOMATED SINGLE-CHIP DRIVE MANAGER AND DISK DRIVE CONTROLLER

DATA BRIEF

1 ATA Host Interface Block

- Synchronous DMA (modes 0-4)
- Fast IDE PIO modes 0-4
- ATA Multiword DMA modes 0-2; supports 60 ns cycle time
- Basic level of ATAPI support
- IORDY for PIO flow control
- Automatic ATA R/W command execution
- Automatic ATA task file updates
- 128-byte host FIFO to/from buffer
- LBA or CHS TASK File Modes
- Read/write cache support with interrupt suppression
- Programmable IRQ automation for different BIOS implementations
- Provides logic for daisy chaining two embedded disk drive controllers
- Full BIOS compatibility
- On-chip selectable 4/8/12 mA host drivers

2 DSP Core

- 60 MIPS operation
- 16-bit, fixed-point DSP
- 16x16-bit, 2's complement parallel multiplier with 32-bit product
- Single-cycle multiply and accumulate
- 36-bit ALU with two 36-bit accumulators
- Bit manipulation unit with 2 additional accumulators
- 6 K words on-chip RAM

3 Buffer Controller Block

- 16-bit wide buffer data bus
- 16 Mbit x 16 SDRAM support; up to 150 Mbyte/s buffer bandwidth
- Automated Data Flow Management (ADFM) automates disk/host transfers
- Dynamic segment size switching
- Auto-Write cache support
- Automatic servo split address adjustment
- Disk LBA counter

4 EDAC Block

- Optimized ECC with up to six burst on-the-fly (OTF) correction
- Programmable 480-bit Reed-Solomon code

Figure 1. Package

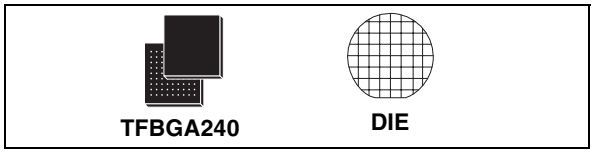

Table 1. Order Codes

Part Number	Package
L5510	TFBGA240
AIC-5465-DIE	DIE

- Programmable 3-, 4-, or 5-way interleaving with 6 to 12 8-bit symbols per interleave
- Optional 3 or 5 byte CRC support
- Guarantee up to 233-bit single burst or six 33-bit bursts OTF correction in <3 sector time
- ECC seeding validating servo and head track position
- AIC-8381 polynomial support for backward compatibility

5 Disk Controller Block

- Enhanced Headerless Architecture (EDSA)
- Up to 450 Mbits/s data rate, byte-wide NRZ
- 31 x 3 byte flexible high-speed RAM- based sequencer
- Defect skipping and/or embedded servo capabilities with Constant Density Recording (CDR)
- 128-byte disk FIFO to/from buffer
- Disk error condition summary bit added to reduce error detection time
- Three-index timer
- MR and PRML channel support

6 Servo Block

- Automatic internal sector mark generation
- Programmable servo burst sequencer
- Programmable servo timing mark sequencer
- Flexible gating and control generation
- User programmable control output pins
- Allows servo format flexibility
- Synchronous servo support

This is preliminary information on a new product now in development. Details are subject to change without notice.

7 Other Features

- 208-pin QFP package
- Automatic and programmed power-down modes
- 3.3 V I/Os with 5 V tolerance, 2.5 V logic core
- Programmable read channel and preamp VCM serial interfaces
- Dual on-chip frequency synthesizers optimize DSP, servo, Ultra-DMA and buffer performance
- General purpose I/O and PWM pins
- Programmable baud-rate RS232 interface

8 DESCRIPTION

The Device is a highly integrated, automated single-chip Drive Manager and Disk Drive Controller IC designed for high-performance, headerless ATA drive applications. Figure 2 shows the chip's main functional blocks.

Figure 2. Functional Block Diagram

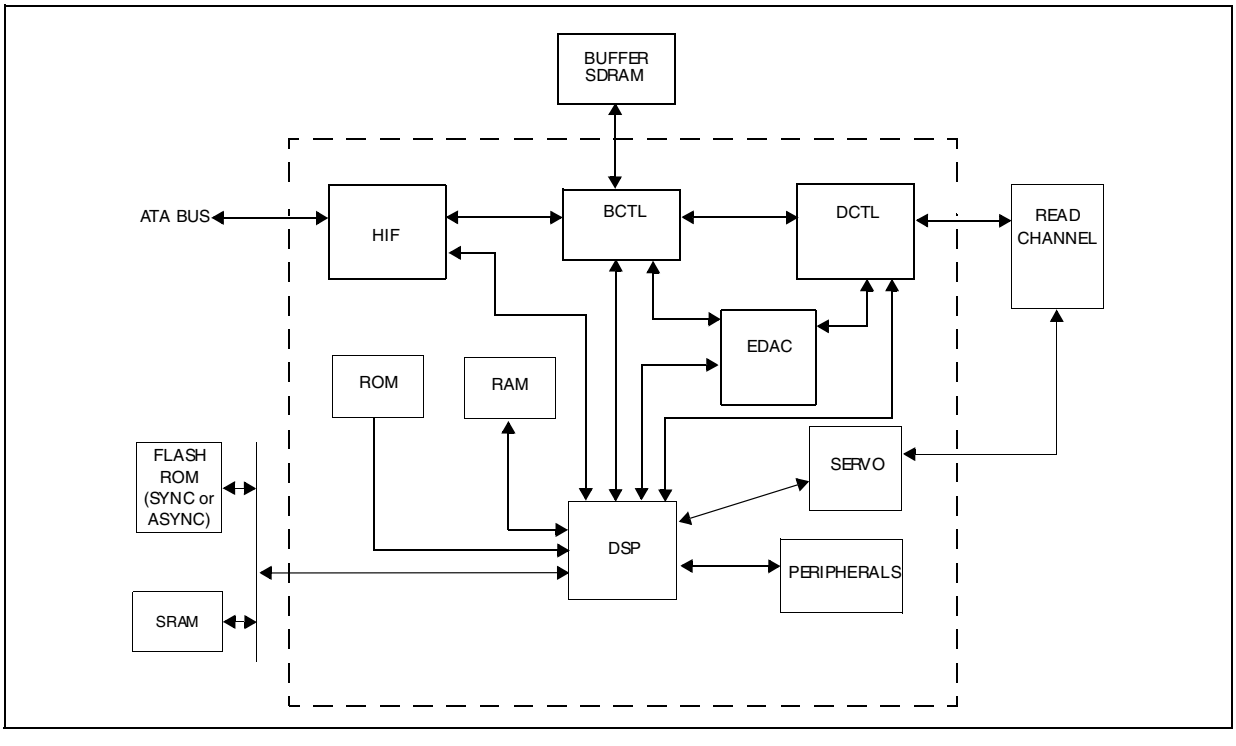

Table 2. Revision History

Date	Revision	Description of Changes
December 2004	1	First Issue

Information furnished is believed to be accurate and reliable. However, STMicroelectronics assumes no responsibility for the consequences of use of such information nor for any infringement of patents or other rights of third parties which may result from its use. No license is granted by implication or otherwise under any patent or patent rights of STMicroelectronics. Specifications mentioned in this publication are subject to change without notice. This publication supersedes and replaces all information previously supplied. STMicroelectronics products are not authorized for use as critical components in life support devices or systems without express written approval of STMicroelectronics.

The ST logo is a registered trademark of STMicroelectronics.
All other names are the property of their respective owners

© 2004 STMicroelectronics - All rights reserved

STMicroelectronics GROUP OF COMPANIES
Australia - Belgium - Brazil - Canada - China - Czech Republic - Finland - France - Germany - Hong Kong - India - Israel - Italy - Japan - Malaysia - Malta - Morocco - Singapore - Spain - Sweden - Switzerland - United Kingdom - United States of America
www.st.com