Initial Release

16 Channel High Voltage Analog Switch With Bleed Resistors

Features

- HVCMOS technology for high performance
- 220V operating conditions
- Output On-resistance typically 22Ω
- Integrated bleed resistors on the outputs
- 5.0V and 12.0V CMOS logic compatibility
- Very low quiescent power dissipation -10µA
- -45dB min off isolation at 7.5MHz
- Low parasitic capacitance
- Excellent noise immunity
- Flexible operating supply voltages

Applications

- Medical ultrasound imaging
- Non-destructive evaluation

Description

The Supertex HV238 is a 220V 16-channel high voltage analog switch integrated circuit (IC) with output bleed resistors (R_{INT}). The output switches are configured as 2 sets of 8 single pole single throw analog switches. It is intended to be used in applications requiring high voltage switching controlled by low voltage control signals such as ultrasound imaging.

The 2 sets of 8 analog switches are controlled by 2 input logic controls, $D_{IN}1$ and $D_{IN}2$. A logic high on $D_{IN}1$ will turn ON switches 0 to 7 and a logic high on $D_{IN}2$ will turn ON switches 8 to 15. The bleed resistors help to significantly reduce voltage built up on capacitive loads such as piezoelectric transducers connected to the outputs.

Block Diagram

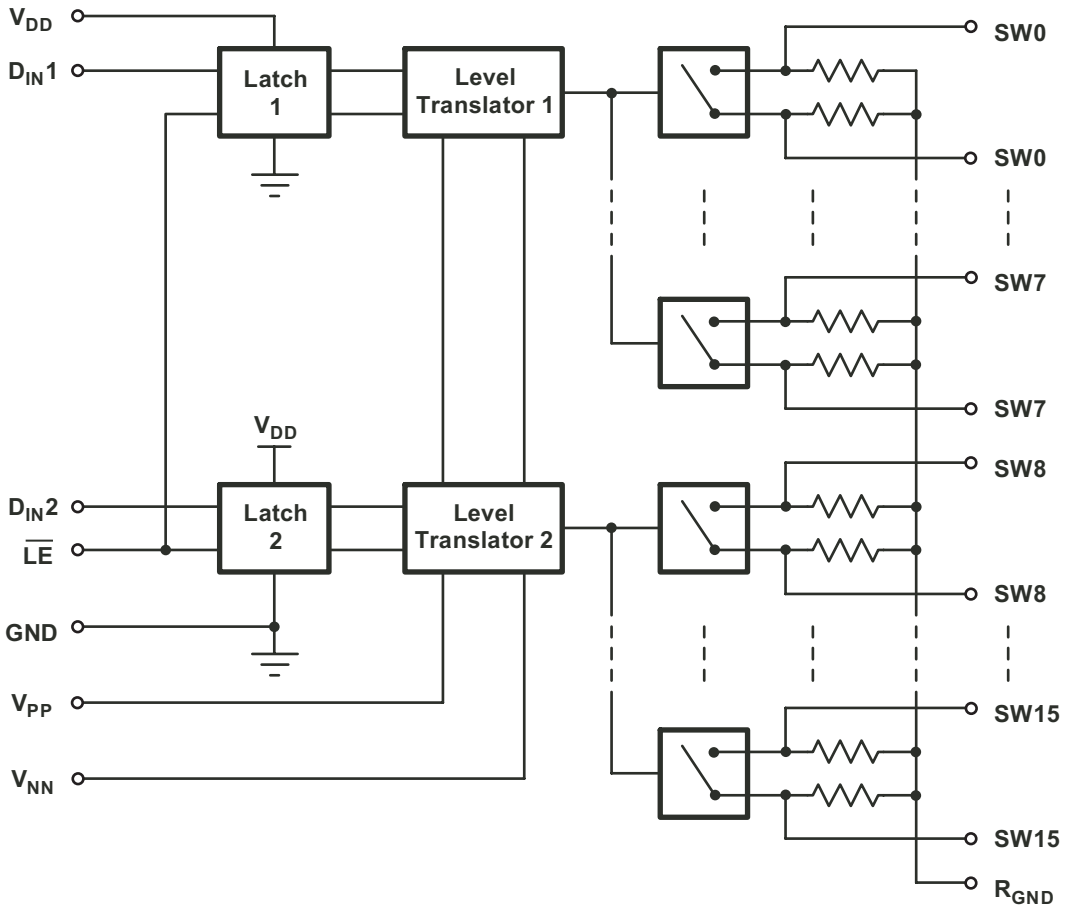

NR070805

Ordering Information

Device	Package Options
	48-lead TQFP
HV238	HV238FG

Absolute Maximum Ratings*

V_{DD} Logic supply		-0.5V to +15V
V_{PP}-V_{NN} differential supply		225V
V_{PP} Positive supply		-0.5V to V_{NN}+225V
V_{NN} Negative supply		+0.5V to –225V
Logic input voltage		-0.5V to V_{DD} +0.3V
Analog signal range		V_{NN} to V_{PP}
Peak analog signal current/channel		3.0A
Storage temperature		-65°C to 150°C
Power dissipation	48-lead TQFP	1.0W

**Absolute Maximum Ratings are those values beyond which damage to the device may occur. Functional operation under these conditions is not implied. Continuous operation of the device at the absolute rating level may affect device reliability.*

Operating Conditions*

Symbol	Parameter	Value
V_{PP}	Positive high voltage supply	50V to 110V
V_{NN}	Negative high voltage supply	-10V to V_{PP} –220V
V_{DD}	Logic power supply voltage	4.75V to 12.6V
V_{IH}	High level input voltage	V_{DD} -1.0V to V_{DD}
V_{IL}	Low level input voltage	0V to 1.0V
V_{SIG}	Analog signal voltage peak-to-peak	V_{NN}+10V to V_{PP}-10V
T_A	Operating free air temperature	0°C to 70°C

*** Notes:**
1 Power up/down sequence is arbitrary except GND must be powered-up first and powered-down last.
2 V_{SIG} must be within V_{NN} and V_{PP} or floating during power up/down transition.
3 Rise and fall times of power supplies V_{DD}, V_{PP}, and V_{NN} should not be less than 1.0msec.

Truth Table

$D_{IN}2$	$D_{IN}1$	$\overline{LE}$	SW0 to SW7	SW8 to SW15
L	L	L	OFF	OFF
L	H	L	ON	OFF
H	L	L	OFF	ON
H	H	L	ON	ON
X	X	H	Hold Previous State	

Electrical Characteristics

DC Characteristics *(over recommended operating conditions unless otherwise noted)*

Sym	Parameter	0°C		+25°C			+70°C		Units	Conditions
		Min	Max	Min	Typ	Max	Min	Max		
R_{ONS}	Small Signal Switch On-Resistance		30		26	32		40	Ω	V_{SIG} = 0V, I_{SIG} = 5mA, V_{PP} = 50V, V_{NN} = -170V
			25		22	27		35		V_{SIG} = 0V, I_{SIG} = 200mA, V_{PP} = 50V, V_{NN} = -170V
			15		22	27		30		V_{SIG} = 0V, I_{SIG} = 5mA, V_{PP} = 110V, V_{NN} = -110V
			20		18	22		25		V_{SIG} = 0V, I_{SIG} = 200mA, V_{PP} = 110V, V_{NN} = -110V
ΔR_{ONS}	Small Signal Switch On-Resistance Matching		20		5.0	20		20	%	V_{SIG} = 0V, I_{SIG} = 5mA, V_{PP} = 110V, V_{NN} = -110V
R_{ONL}	Large Signal Switch On-Resistance				15				Ω	V_{SIG} = 0V, I_{SIG} = 1.0A
R_{INT}	Output Switch Shunt Resistance			20	35	50			KΩ	Output Switch to R_{GND} I_{RINT} = 0.5mA
I_{SOL}	Switch Off Leakage per Switch		5.0		1.0	10		15	µA	V_{SIG} = V_{PP}-10V and V_{NN} = +10V
	DC offset Switch off		300		100	300		300	mV	No Load
	DC offset Switch on		500		100	500		500	mV	No Load
I_{PPQ}	Quiescent V_{PP} supply current				10	50			µA	All switches off
I_{NNQ}	Quiescent V_{NN} supply current				-10	-50			µA	All switches off
I_{PPQ}	Quiescent V_{PP} supply current				10	50			µA	All switches on, I_{SW} = 5mA
I_{NNQ}	Quiescent V_{NN} supply current				-10	-50			µA	All switches on, I_{SW} = 5mA
	Switch output peak current		3.0		3.0	2.0		2.0	A	V_{SIG} duty cycle < 0.1%
f_{SW}	Output switch frequency					50			kHz	Duty cycle=50%
I_{PP}	Average V_{PP} supply current		6.5			8.8		10	mA	V_{PP} = 50V, V_{NN} = -170V, All Switches turning ON and OFF at 50kHz
I_{NN}	Average V_{NN} supply current		8.1			-8.8		-10		
I_{PP}	Average V_{PP} supply current		-8.1			6.3		6.9	mA	V_{PP} = 110V, V_{NN} = -110V, All Switches turning ON and OFF at 50kHz
I_{NN}	Average V_{NN} supply current		5.0			-6.3		-6.9		
I_{DDQ}	Quiescent V_{DD} supply current		10			10		10	µA	All logic inputs are static
I_{DD}	Average V_{DD} supply current		2.0			2.0		2.0	mA	$D_{IN}1$ = $D_{IN}2$ = 3MHz, $\overline{LE}$ = high
C_{IN}	Logic input capacitance		10			10		10	pF	

Electrical Characteristics

AC Characteristics *(over recommended operating conditions unless otherwise noted)*

Sym	Parameter	0°C		+25°C			+70°C		Units	Conditions
		Min	Max	Min	Typ	Max	Min	Max		
t_{WLE}	Time Width of $\overline{LE}$	150		150			150		ns	
t_{WDIN}	Time Width of D_{IN}	150		150			150		ns	
t_{SD}	Set Up Time Before $\overline{LE}$ Rises	150		150			150		ns	
T_{ON}	Turn On Time		2.0			2.0		2.0	µs	$V_{SIG} = V_{PP}$-10V, R_{LOAD} = 10KΩ
T_{OFF}	Turn Off Time		2.0			2.0		2.0	µs	$V_{SIG} = V_{PP}$-10V, R_{LOAD} = 10KΩ
dv/dt	Maximum V_{SIG} Slew Rate		20			20		20	V/ns	
KO	Off Isolation	-30		-30	-33		-30		dB	F = 5MHz, Load = 1KΩ//15pF
		-45		-45	-50		-45			F = 7.5MHz, R_{LOAD} = 50Ω
K_{CR}	Switch Crosstalk	-45		-45			-45		dB	F = 5.0MHz, R_{LOAD} = 50Ω
I_{ID}	Output Switch Isolation Diode Current		300			300		300	mA	300ns pulse width, 2.0% duty cycle
$C_{SG(OFF)}$	Off Capacitance Switch to Gnd	5.0	17	5.0	12	17	5.0	17	pF	V_{SIG} = 0V, f = 1.0MHz
$C_{SG(ON)}$	On Capacitance Swithc to Gnd	25	50	25	38	50	25	50	pF	V_{SIG} = 0V, f = 1.0MHz
$+V_{SPK}$	Output Voltage Spike				4.0				V	R_{LOAD} = 50Ω
$-V_{SPK}$					-4.0					

Logic Timing Diagram

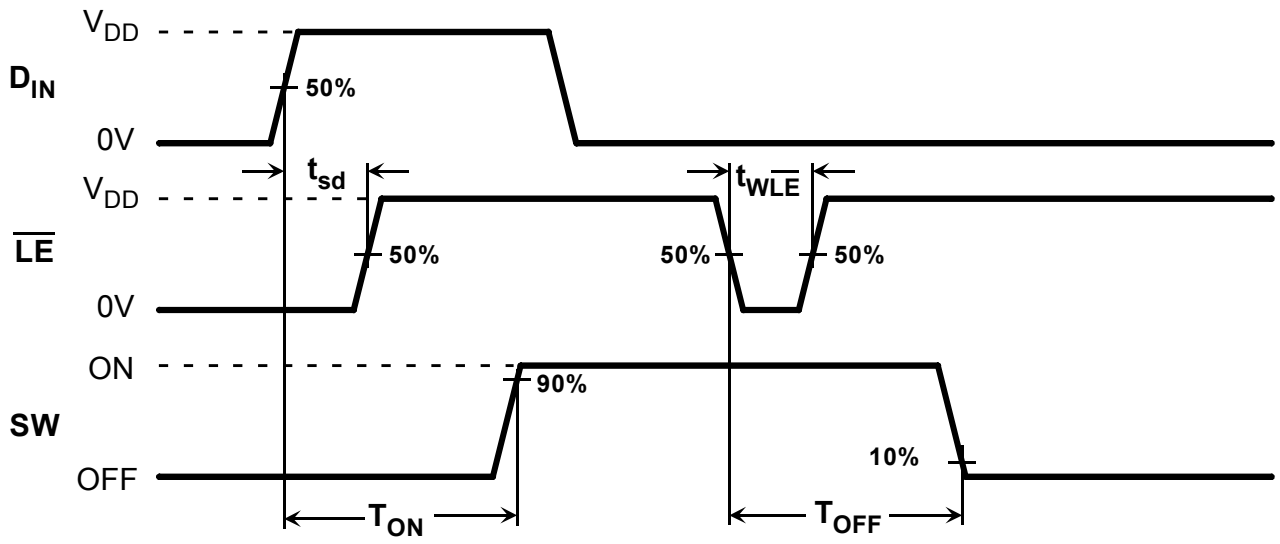

Test Circuits

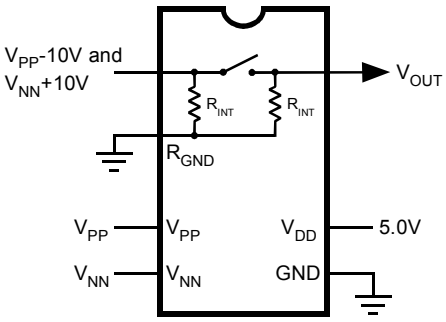

$I_{SOL} = \frac{V_{OUT}}{R_{INT}}$

Switch OFF Leakage

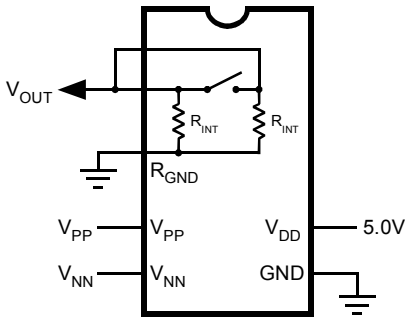

DC Offset ON/OFF

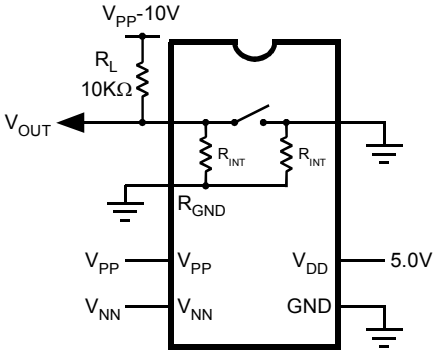

T_{ON}/T_{OFF}

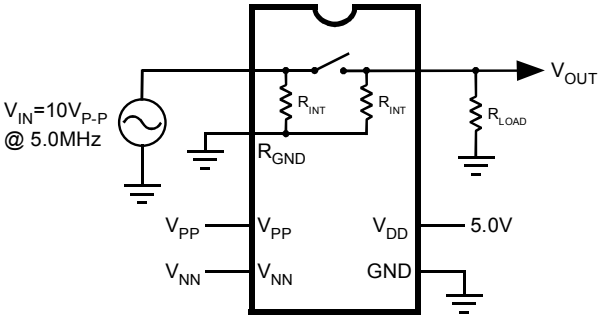

$KO = 20Log \frac{V_{OUT}}{V_{IN}}$

Off Isolation

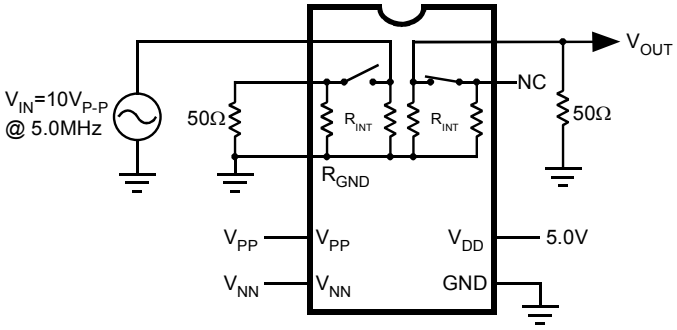

$K_{CR} = 20Log \frac{V_{OUT}}{V_{IN}}$

Crosstalk

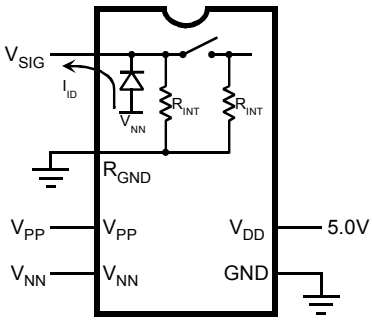

Isolation Diode Current

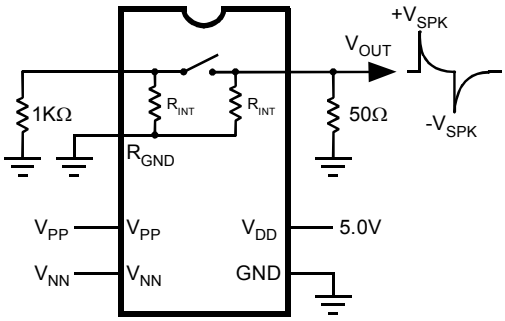

Output Voltage Spike

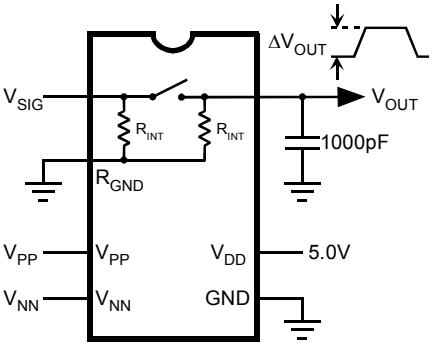

$Q = 1000pF \times \Delta V_{OUT}$

Charge Injection

NR070805

Pin Configurations

48-lead TQFP

Pin	Function	Pin	Function
1	V_{NN}	25	SW10
2	N/C	26	SW10
3	V_{PP}	27	SW9
4	N/C	28	SW9
5	$D_{IN}1$	29	SW8
6	$\overline{LE}$	30	SW8
7	$D_{IN}2$	31	SW7
8	N/C	32	SW7
9	N/C	33	SW6
10	V_{DD}	34	SW6
11	GND	35	SW5
12	N/C	36	SW5
13	R_{GND}	37	SW4
14	SW15	38	N/C
15	SW15	39	SW4
16	SW14	40	N/C
17	SW14	41	SW3
18	SW13	42	SW3
19	SW13	43	SW2
20	SW12	44	SW2
21	SW12	45	SW1
22	SW11	46	SW1
23	SW11	47	SW0
24	N/C	48	SW0

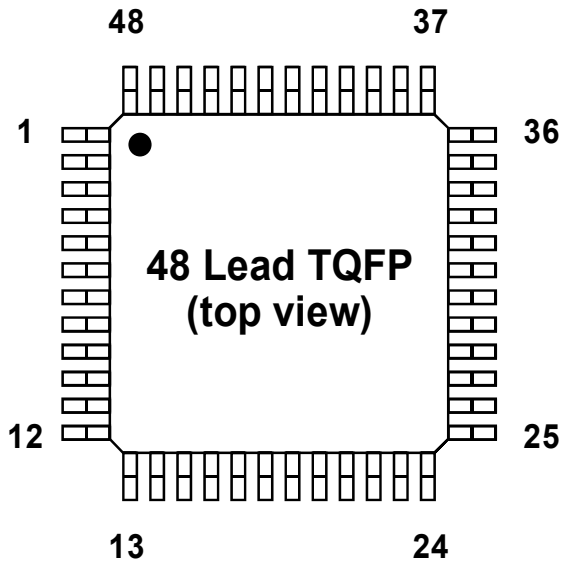

48-lead TQFP Package Dimensions

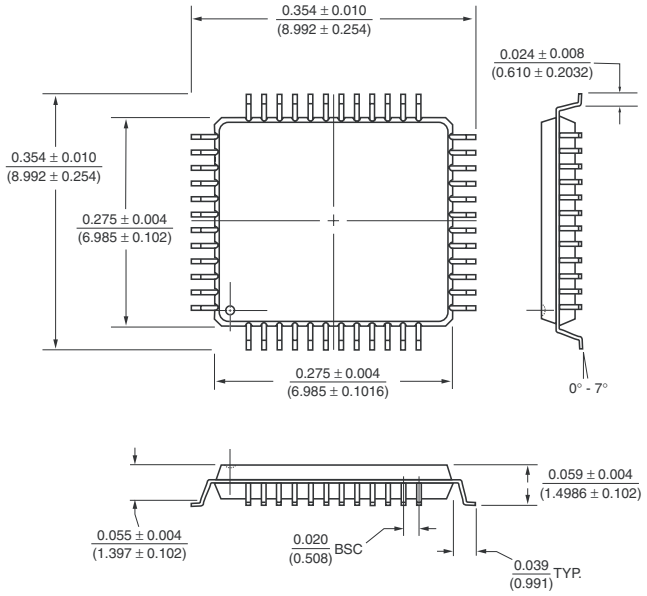

Measurement Legend = $\frac{\text{Dimensions in Inches}}{\text{(Dimensions in Millimeters)}}$

Supertex inc. does not recommend the use of its products in life support applications and will not knowingly sell its products for use in such applications unless it receives an adequate "products liability indemnification insurance agreement". ***Supertex*** does not assume responsibility for use of devices described and limits its liability to the replacement of the devices determined defective due to workmanship. No responsibility is assumed for possible omissions or inaccuracies. Circuitry and specifications are subject to change without notice. For the latest product product specifications, refer to the ***Supertex*** website: http//www.supertex.com. For complete liability information on all ***Supertex*** products, refer to the most current databook or to the Legal/ Disclaimer page on the ***Supertex*** website.

©2005 ***Supertex inc.*** All rights reserved. Unauthorized use or reproduction is prohibited.

Supertex inc.
1235 Bordeaux Drive, Sunnyvale, CA 94089
TEL: (408) 222-8888 / FAX: (408) 222-4895
www.supertex.com