DS1135L
3V 3-in-1 High-Speed Silicon Delay Line

www.maxim-ic.com

FEATURES

- All-silicon timing circuit
- Three independent buffered delays
- Stable and precise over temperature and voltage
- Leading and trailing edge precision preserves the input symmetry
- Standard 8-pin SO (150mil), and 8-Pin µSOP (118mil)
- Vapor phase and IR reflow solderable
- Available in Tape and Reel
- Delays specified over both commercial and industrial temperature ranges
- 3V operation
- Recommended replacement for DS1033

PIN ASSIGNMENT

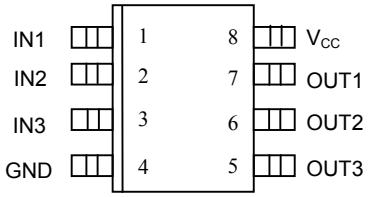

DS1135LZ 8-Pin SO (150mil)
DS1135LU 8-Pin µSOP (118mil)
See Mech. Drawings Section

PIN DESCRIPTION

IN1-IN3	- Input Signals
OUT1-OUT3	- Output Signals
V_{CC}	- +3V Supply
GND	- Ground

DESCRIPTION

The DS1135L series is a low-power, 3V high-speed version of the popular DS1013, DS1033, DS1035 series.

The DS1135L series of delay lines have three independent logic buffered delays in a single package. The device is Dallas Semiconductor's fastest 3-in-1 delay line. It is available in a standard 8-pin 118mil µSOP and 150mil 8-pin Mini-SO.

The device features precise leading and trailing edge accuracy. It has the inherent reliability of an all-silicon delay line solution.

Standard delay values are indicated in Table 1. Customers may contact Dallas Semiconductor at (972) 371-4348 for further information on custom delay values.

LOGIC DIAGRAM Figure 1

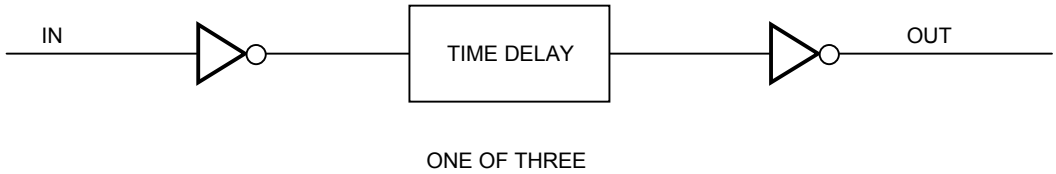

PART NUMBER DELAY TABLE (t_{PLH} , t_{PHL}) Table 1

PART NUMBER	DELAY PER OUTPUT (ns)	INITIAL TOLERANCE (Note 1)	TOLERANCE OVER TEMP AND VOLTAGE (Note 2)	
			0°C to +70°C	-40°C to +85°C
DS1135LX-10	10/10/10	±1.0ns	±2.0ns	±3.0ns
DS1135LX-12	12/12/12	±1.0ns	±2.0ns	±3.0ns
DS1135LX-15	15/15/15	±1.0ns	±2.5ns	±4.0ns
DS1135LX-20	20/20/20	±1.0ns	±2.5ns	±4.0ns
DS1135LX-25	25/25/25	±1.5ns	±3.0ns	±5.0ns
DS1135LX-30	30/30/30	±1.5ns	±3.0ns	±5.0ns

NOTES:

1. Nominal conditions are +25°C and V_{CC} = +3.3V.

2. Voltage range of 2.7V to 3.6V.

3. Delay accuracies is for both leading and trailing edges.

4. X in Part number denotes package: U indicates µSOP, Z indicates SO.

TEST SETUP DESCRIPTION

Figure 2 illustrates the hardware configuration used for measuring the timing parameters of the DS1135L. The input waveform is produced by a precision pulse generator under software control. Time delays are measured by a time interval counter (20 ps resolution) connected to the output. The DS1135L output taps are selected and connected to the interval counter by a VHF switch control unit. All measurements are fully automated with each instrument controlled by the computer over an IEEE 488 bus.

DS1135L TEST CIRCUIT Figure 2

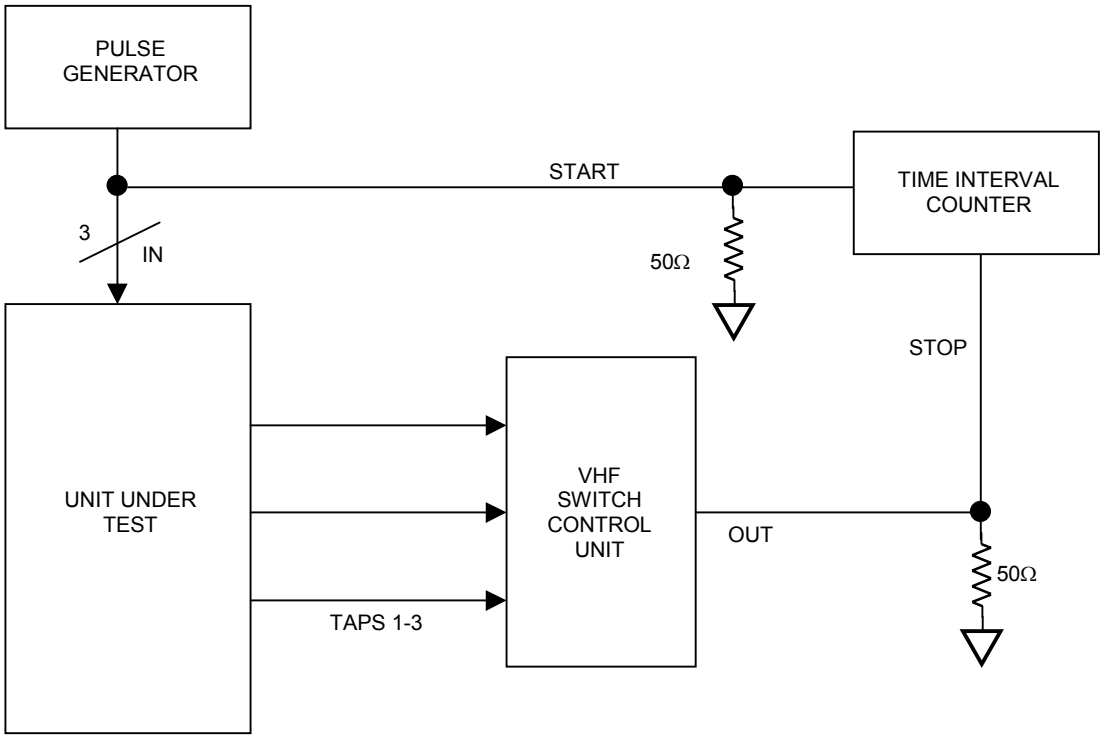

ABSOLUTE MAXIMUM RATINGS*

Voltage on Any Pin Relative to Ground	-1.0V to +6.0 V
Operating Temperature	-40°C to +85°C
Storage Temperature	-55°C to +125°C
Soldering Temperature	See J-STD-020A specification
Short Circuit Output Current	50mA for 1 second

* This is a stress rating only and functional operation of the device at these or any other conditions above those indicated in the operation sections of this specification is not implied. Exposure to absolute maximum rating conditions for extended periods of time may affect reliability.

DC ELECTRICAL CHARACTERISTICS (-40°C to +85°C;V_{CC}=2.7-3.6V)

PARAMETER	SYMBOL	TEST CONDITION	MIN	TYP	MAX	UNITS
Supply Voltage	V_{CC}		2.7	3.3	3.6	V
Active Current	I_{CC}	V_{CC}=3.6V Period=1µs			10	mA
High Level Input Voltage	V_{IH}		2.0		V_{CC}+0.5	V
Low Level Input Voltage	V_{IL}		-0.5		0.8	V
Input Leakage	I_L	$0V \le V_I \le V_{CC}$	-1.0		+1.0	µA
High Level Output Current	I_{CC}	V_{CC}=2.7V V_{OH}=2V			-1.0	mA
Low Level Output Current	I_{CC}	V_{CC}=2.7V V_{OL}=0.4V	8			mA

AC ELECTRICAL CHARACTERISTICS (-40°C to +85°C;V_{CC}=2.7-3.6V)

PARAMETER	SYMBOL	MIN	TYP	MAX	UNITS	NOTES
Period	t_{PERIOD}	2 (t_{WI})			ns	
Input Pulse Width	t_{WI}	100% of Delay Value			ns	
Input-to-Output Delay	t_{PLH}, t_{PHL}	See Table 1			ns	
Output Rise or Fall Time	t_{OF}, t_{OR}		2.0	2.5	ns	
Power-up Time	t_{PU}			1	ms	2

CAPACITANCE (T_A=25°C)

PARAMETER	SYMBOL	MIN	TYP	MAX	UNITS	NOTES
Input Capacitance	C_{IN}			10	pF	

TEST CONDITIONS

Ambient Temperature: 25°C ± 3°C
Supply Voltage (V_{CC}): 3.3V ± 0.1V
Input Pulse:
High: 3.0V ± 0.1V
Low: 0.0V ± 0.1V
Source Impedance: 50Ω Max.
Rise and Fall Time: 3.0ns Max. — Measured between 0.6V and 2.4V.
Pulse Width: 500ns
Pulse Period: 1µs
Output Load Capacitance: 15pF
Output: Each output is loaded with the equivalent of one 74F04 input gate.
Data is measured at the 1.5V level on the rising and falling edges.

Note: The above conditions are for test only and do not restrict the devices under other data sheet conditions.

TIMING DIAGRAM

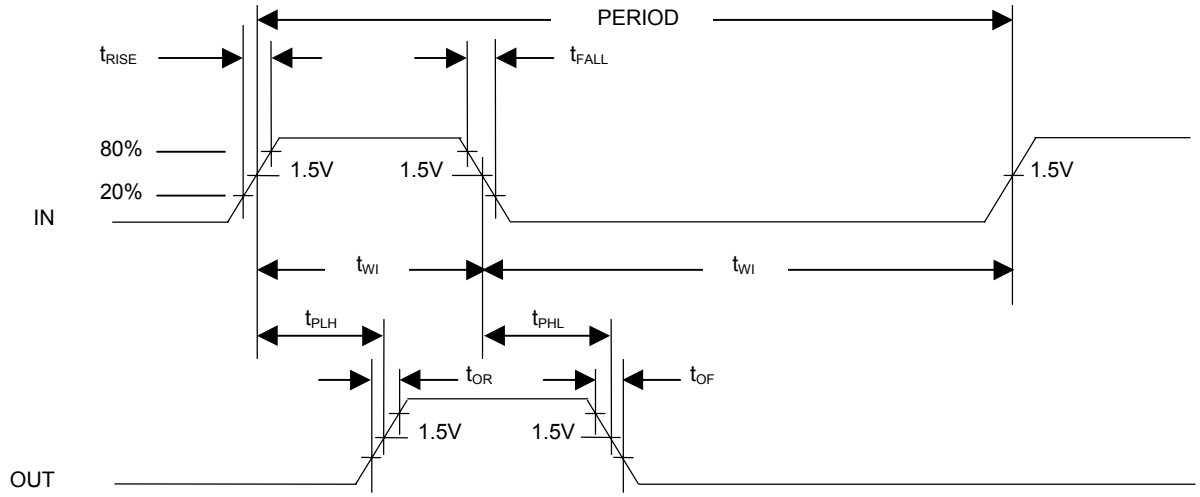

NOTES:

1. All voltages are referenced to ground.

2. Power-up time is the time from the application of power to the time stable delays are being produced at the output.

TERMINOLOGY

Period: The time elapsed between the leading edge of the first pulse and the leading edge of the following pulse.

t_{WI} (Pulse Width): The elapsed time on the pulse between the 1.5V point on the leading edge and the 1.5V point on the trailing edge or the 1.5V point on the trailing edge and the 1.5V point on the leading edge.

t_{RISE} (Input Rise Time): The elapsed time between the 20% and the 80% point on the leading edge of the input pulse.

t_{FALL} (Input Fall Time): The elapsed time between the 80% and the 20% point on the trailing edge on the input pulse.

t_{PLH} (Time Delay, Rising): The elapsed time between the 1.5V point on the leading edge of the input pulse and the 1.5V point on the leading edge of the output pulse.

t_{PHL} (Time Delay, Falling): The elapsed time between the 1.5V point on the falling edge of the input pulse and the 1.5V point on the falling edge of the output pulse.

ORDERING INFORMATION

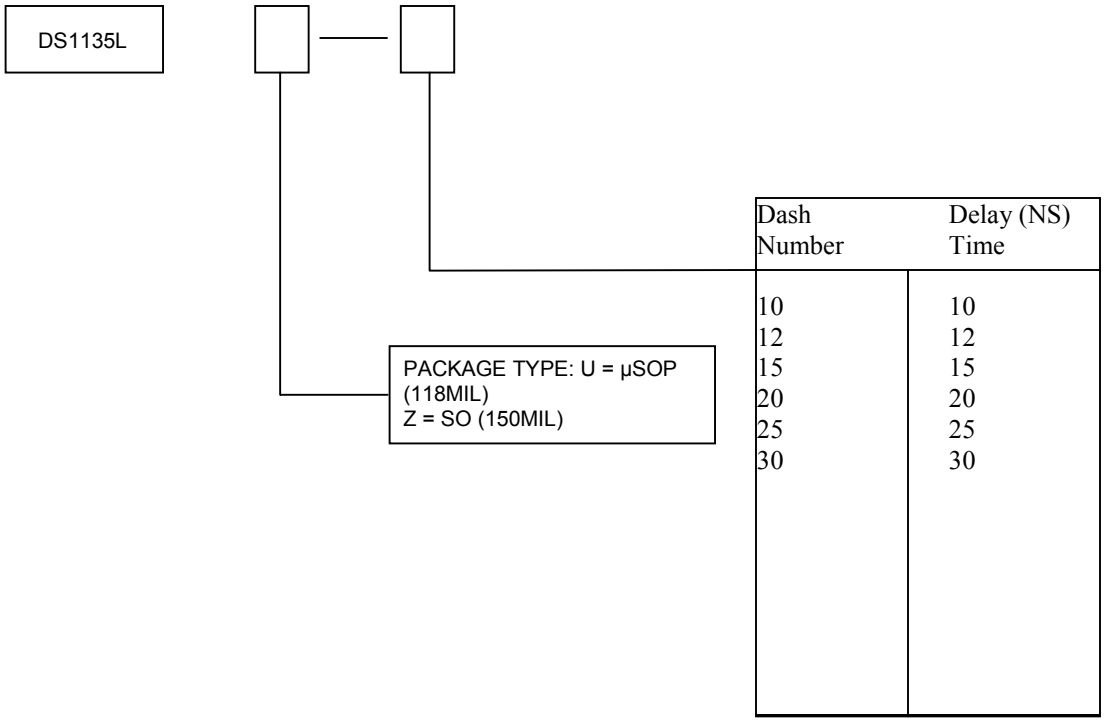

Dash Number	Delay (NS) Time
10	10
12	12
15	15
20	20
25	25
30	30