NEC
ELECTRON DEVICE

MOS INTEGRATED CIRCUIT

μPD1723GF-013, μPD1723GF-213

PLL FREQUENCY SYNTHESIZER AND CONTROLLER FOR FM/MW/LF TUNER (CAR AUDIO)

The μPD1723GF-013 and μPD1723GF-213 are CMOS LSI developed for worldwide PLL frequency synthesizer FM/MW/LW tuner use.

Their package is a 64-pin QFP. On-chip PLL frequency synthesizer, controller, 200 MHz prescaler, LCD driver, and IF counter allow the construction of a compact FM/MW/LW tuner with a high-performance clock for high-end car stereo and home stereo sets.

FEATURES

- Worldwide FM/MW banks and European LW band can be received.
- Abundant tuning functions, including manual tuning, autotuning (seek, scan), and preset memory scan
- Six buttons, independent preset memories for 18 FM stations (FM1, FM2, FM3; 6 stations each), 12 MW stations (MW1, MW2; 6 stations each), 6 LW stations, and VF band
- FM: 3, MW: 2, LW: 1, VF: 1 last channel memories
- VF broadcast station (traffic information) autotuning (SK signal search) and DK standby function
- MONO (MONORAL) and LOC (LOCAL/DX) control output and display
- "ST" (STEREO) display
- MTL (METAL), NR_1 (NOISE REDUCTION), NR_2, and AMS (AUTO MUSIC SEARCH) control output and display
- Auto preset memory function
- "CD" (Compact Disk) display
- LOUD (LOUDNESS) control output and display
- 12 hour and 24 hour clock display function (no clock display also possible)
- Single 5 V ±10 % power supply
- On-chip prescaler (200 MHz max. V_{in} = 0.3 V_{P-P}), IF counter, LCD driver (1/2 duty, 1/2 bias drive, frame frequency (100 Hz))

ORDERING INFORMATION

Order Code	Package	Quality Grade
μPD1723GF-011-3BE	64-pin plastic QFP (14x20)	Standard
μPD1723GF-211-3KE	64-pin plastic QFP (14x20)	Standard

Please refer to "Quality grade on NEC Semiconductor Devices" (Document number IEI-1209) published by NEC Corporation to know the specification of quality grade on the devices and its recommended applications.

Document No. IC–2772
(O.D.No. IC–8187)
Date Published January 1991 P
Printed in Japan

© NEC Corporation 1991

FUNCTIONS

Receiving frequency, channel spacing, reference frequency, intermediate frequency

Area \ Item / Band		Receiving Frequency	Channel Space	Reference Frequency	Intermediate Frequency
Europe 1	FM	87.500 to 108.00 MHz	50 kHz	25 kHz	10.7 MHz
	MW	522 to 1620 kHz	9 kHz	9 kHz	450 kHz
	LW	144 to 290 kHz	1 kHz	1 kHz	450 kHz
Europe 2	FM	87.500 to 108.000 MHz	50 kHz	25 kHz	10.7 MHz
	MW	522 to 1620 kHz	9 kHz	9 kHz	459 kHz
	LW	144 to 290 kHz	1 kHz	1 kHz	459 kHz
United States 1	FM	87.5 to 108.0 MHz	100 kHz	25 kHz	10.7 MHz
	MW	530 to 1620 kHz	10 kHz	10 kHz	450 kHz
United States 2	FM	87.5 to 107.9 MHz	200 kHz	25 kHz	10.7 MHz
	MW	630 to 1620 kHz	10 kHz	10 kHz	450 kHz
United States 3	FM	87.5 to 107.9 MHz	200 kHz	25 kHz	10.7 MHz
	MW	530 to 1710 kHz	10 kHz	10 kHz	450 kHz
Australia and Middle East	FM	87.5 to 108.0 MHz	100 kHz	25 kHz	10.7 MHz
	MW	531 to 1602 kHz	9 kHz	9 kHz	450 kHz
Japan	FM	76.0 to 90.0 MHz	100 kHz	25 kHz	–10.7 MHz
	MW	522 to 1629 kHz	9 kHz	9 kHz	450 kHz
Central and South America	FM	87.5 to 108.0 MHz	100 kHz	25 kHz	10.7 MHz
	MW	520 to 1620 kHz	5 kHz	5 kHz	450 kHz

RADIO FUNCTIONS

(1) Manual tuning

Manual up / Manual down ..... Step and fast

(2) Autotuning

Seek up / Seek down ..... When a broadcast station is detected that frequency is held.

Scan up / Scan down ..... Broadcast station is received every 5 seconds.

(3) Preset memory scan ..... Contents of independent FM, MW and LW preset memories are received every 5 seconds.

(4) VF autotuning

SK seek up / SK seek down ..... When an SK signal is detected, that frequency is held.

SK scan up / SK scan down ..... Broadcast station with SK signal is received every 5 seconds.

(5) Preset memory
FM band ..... FM1: 6 stations, FM2: 6 stations, FM3: 6 stations
MW band ..... MW1: 6 stations, MW2: 6 stations
LW band ..... 6 stations
VF band ..... 6 stations
When the LW band is used, MW2 cannot be used.

(6) Last preset memory ..... FM1, FM2, FM3, MW1, MW2, LW and VF; 1 station each

(7) LOC (LOCAL) control output and display (Auto Local Function selection possible)

(8) FM MONO (MONORAL) control output and display (VF band is same as FM)

(9) "ST" (STEREO) display ..... Effective at FM and VF

(10) Auto preset memory

(11) DK standby and SK alarm functions

TAPE FUNCTIONS

(1) Tape direction display ..... Flashes at 2 MHz at fast forward.

(2) AMS (AUTO MUSIC SEARCH) control output and display

(3) MTL (METAL) control output and display

(4) NR_1 (NOISE REDUCTION) and NR_2 control output and display

CLOCK FUNCTIONS

(1) 12 hour clock display (with "AM" and "PM" display) or 24 hour clock display selectable

(2) Colon (" : ") flashing (1 Hz) selectable

(3) In non-clock mode, low consumption current (10 μA max.) backup possible

OTHERS

(1) LOUD (LOUDNESS) control output and display ..... Common in radio, tape, and CD modes

(2) Key acknowledge (BEEP) output (2.25 kHz, 40 ms) ..... Output by effective momentary key

(3) Display switching and priority display functions

(4) "" (compact disk) display

(4) " " (compact disk) display

PIN CONFIGURATION (Top View)

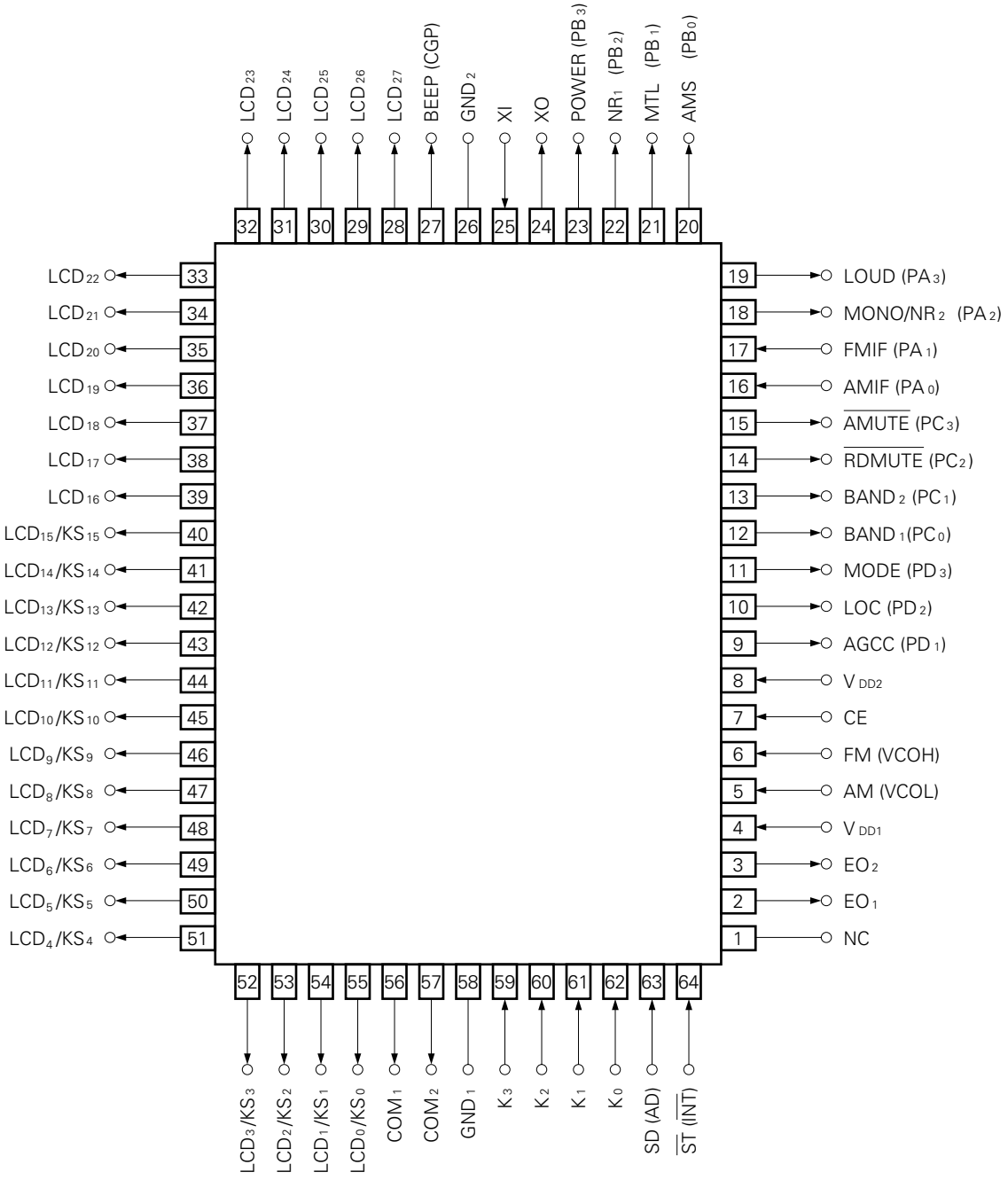

PIN DESCRIPTIONS

PIN No.	SYMBOL	PIN NAME	DESCRIPTION	OUTPUT TYPE
1	NC	No connection	This pin is not connected to the internal chip. Therefore, leave it open or connect it to GND, V_{DD}, etc.	—
2 3	EO_1 EO_2	Error out	PLL (Phase Locked Loop) error output pins. When the frequency obtained by dividing the local oscillation frequency (VCO output) is higher than the reference frequency, High level is output from these pins. When it is lower than the reference frequency, Low level is output from these pins. When the two frequencies are the same, these pins are floated. This output is input to an external LPF (Low Pass Filter) and is applied to a varactor diode through the LPF. EO_1 and EO_2 output the same waveform so that the pin to be used can be freely selected. When the radio is OFF, these pins are floated.	CMOS 3-state
4 8	V_{DD1} V_{DD2}	Power supply input	Device power supply input pin. This pin supplies 5 V ±10 % power voltage during device operation (radio, tape, and CD modes). When the diode matrix NOCLK switch is 1 (shorted by diode), when the CE pin (pin 7) is made Low level, this pin drops to 2.5 V and data hold is enabled. When a voltage of 0 → 4.5 V is supplied to this pin, the data is initialized. Supply 0 → 4.5 V to this pin within 500 ms. Always connect pins 4 and 8 to the same potential. V_{DD1} (pin 4) is the analog system (PLL, A/D converter, INT, CE) power supply and V_{DD2} (pin 8) is the digital system (CPU, LCD driver, IF counter) power supply.	—
5	AM	AM local oscillation input	The AM (MW and LW band) local oscillation output (VCO output) is input to this pin. When the radio is turned on and the MW or LW band is received, this pin becomes active. Otherwise, it is pulled down internally. The input amplitude is 0.3 V_{P-P} MIN. Since there is an on-chip AC amplifier, block the DC component with a capacitor.	Input

PIN No.	SYMBOL	PIN NAME	DESCRIPTION	OUTPUT TYPE
6	FM	FM local oscillation input	The FM local oscillation output (VCO output) is input to this pin. When the radio is turned on and the FM band is received, this pin becomes active. Otherwise, it is pulled down internally. The input amplitude is 0.3 V_{P-P} MIN. Since there is an on-chip AC amplifier, block the DC component of the input signal with a capacitor.	Input
7	CE	Chip enable	Device select signal input pin. When the device is operated normally (radio, tape, CD, clock display, etc.), High level is input and when the device is not used, Low level is input. However, High and Low levels of 134 μs or less are not accepted. When this pin is Low level, the radio, tape, CD, and display are turned off and the device enters the data hold state. At this time, data hold at low consumption current (400 nA or less) is possible by setting the NOCLK switch of the diode matrix to be described later to 1 (shorted by diode, no-clock mode).	Input
9	AGCC	AGC cut output	Radio mode AGC (AUTOMATIC GAIN CONTROL) cut signal output pin. During autotuning, the High level shown below is output. 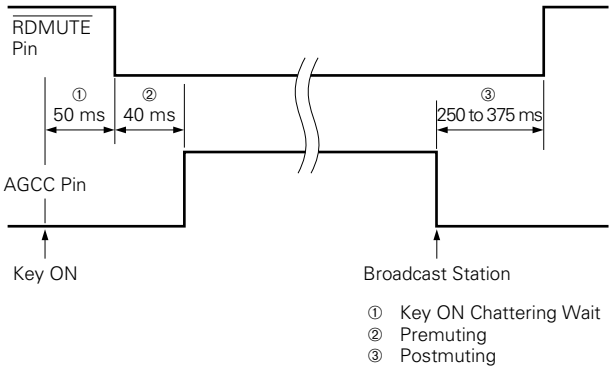 	CMOS pushpull

<table>
<tr><th>PIN No.</th><th>SYMBOL</th><th>PIN NAME</th><th>DESCRIPTION</th><th>OUTPUT TYPE</th></tr>
<tr><td>10</td><td>LOC</td><td>Local output</td><td>Radio mode LOCAL signal output pin.
This pin is valid when the initialize diode AUTOLOC switch is 0.
Each time the LOC key is pressed, the LOCAL state is inverted. In the LOCAL state, the LCD panel “LOC” display lights.
When autotuning (seek up/down, scan up/down, auto memory) is performed when the “LOC” display is ON, High level is output from this pin. The LOCAL state is common to the FM, VF, MW, and LW bands.
When the power is turned on, this pin goes low.</td><td>CMOS pushpull</td></tr>
<tr><td>11</td><td>MODE</td><td>Mode signal output</td><td>Mode switching signal output pin.
Its output in each mode is shown below.
<table>
<tr><th>Mode</th><th>MODE</th></tr>
<tr><td>• CW = Low</td><td>0</td></tr>
<tr><td>• CE = High; radio, tape, and CD OFF</td><td>0</td></tr>
<tr><td>• Radio mode</td><td>1</td></tr>
<tr><td>• Tape mode</td><td>0</td></tr>
<tr><td>• CD mode</td><td>0</td></tr>
<tr><td>• Tape DK standby
• CD DK standby
• DK ON</td><td>1</td></tr>
<tr><td>• Radio monitor mode</td><td>1</td></tr>
</table>
0: Low level, 1: High level

That is, when the PLL is operated, High level is output from this pin. Therefore, use it to turn the tuner power on and off, etc.</td><td>CMOS pushpull</td></tr>
</table>

<table>
<tr><th>PIN No.</th><th>SYMBOL</th><th>PIN NAME</th><th>DESCRIPTION</th><th>OUTPUT TYPE</th></tr>
<tr><td>12
13</td><td>BAND1,
BAND2</td><td>Band switching signal output</td><td>Radio mode band switching signal output pin.
Its operation is described below.
• Radio mode
When the receiving band is switched by band switching key, the following is output on each band:
• DK standby mode
<table>
<tr><th>Pin / BAND</th><th>BAND1</th><th>BAND2</th></tr>
<tr><td>MW</td><td>0</td><td>0</td></tr>
<tr><td>LW</td><td>0</td><td>1</td></tr>
<tr><td>FM</td><td>1</td><td>0</td></tr>
<tr><td>VF</td><td>1</td><td>1</td></tr>
</table>
(0: Low level, 1: High level)
• DK standby mode
• DK ON mode
<table>
<tr><th>Pin / BAND</th><th>BAND1</th><th>BAND2 /OPT.</th></tr>
<tr><td>VF</td><td>1</td><td>1</td></tr>
</table>
• Radio monitor mode
Same as radio mode.
• Tape mode
• CD mode
Low level output</td><td>CMOS pushpull</td></tr>
</table>

PIN No.	SYMBOL	PIN NAME	DESCRIPTION	Output TYPE
14	$\overline{\text{RDMUTE}}$	Radio mute output	Radio mute signal output pin. This pin operates as follows: • Radio mode Low level is output at radio ON/OFF, band switching, and receiving frequency switching. • Tape and CD modes High level or Low level can be selected by MUTESEL switch of the diode matrix to be described later. However, when using the DK standby or radio monitor function, set the MUTESEL switch to 0 and select low level output. For more information, see **4 "Mute Output Timing Chart"**.	CMOS pushpull
15	$\overline{\text{AMUTE}}$	Audio mute output	Tape and CD mute signal output pin at DK • ON and radio monitor ON. In the radio mode, Low level is output and in the tape and CD modes, High level is output. When DK is turned on during DK standby and in the radio monitor mode, low level is output. For more information, see **4 "Mute Output Timing Chart"**.	CMOS pushpull

<table>
<tr><th>PIN No.</th><th>SYMBOL</th><th>PIN NAME</th><th>DESCRIPTION</th><th>OUTPUT TYPE</th></tr>
<tr><td>16</td><td>AMIF</td><td>AM intermediate frequency input</td><td>AM (MW and LW bands) intermediate frequency (IF) input pin.
The input amplitude is 0.1 V_{P-P}. Since there is an on-chip AC amplifier, block the DC component of the input signal with a capacitor. This pin is valid when the initialize diode matrix DISAMIF switch is 0.
This pin is used for detecting the presence of a broadcast station during MW and LW band autotuning. The input frequency ranges and input conditions for determining the presence of a broadcast station are shown below.
<table>
<tr><th>Area \ Item / Band</th><th></th><th>Input Frequency Range ① [kHz]</th><th>Input Frequency Range ② [kHz]</th></tr>
<tr><td rowspan="2">Europe 1</td><td>MW</td><td>450 ±5</td><td>450 ±2</td></tr>
<tr><td>LW</td><td>450 ±5</td><td>450 ±0.5</td></tr>
<tr><td rowspan="2">Europe 2</td><td>MW</td><td>459 ±5</td><td>459 ±2</td></tr>
<tr><td>LW</td><td>459 ±5</td><td>459 ±0.5</td></tr>
<tr><td>Others</td><td>MW</td><td>450 ±5</td><td>450 ±0.5</td></tr>
</table>
Input frequency range ① is the frequency that must be input within 20 ms after the PLL is locked.
Input frequency range ② is the frequency that must be input within 40 ms after ① was input.
When both input frequency ranges ① and ② are satisfied, a broadcast station is judged to be present and autotuning stops.</td><td>Input</td></tr>
<tr><td>17</td><td>FMIF</td><td>FM intermediate frequency input</td><td>FM band intermediate frequency (IF) input.
The input amplitude is 0.1 V_{P-P}. Since there is an AC amplifier on the chip, block the DC component of the input signal with a capacitor. This pin is valid when the initialize diode matrix switch ENFMIF is 1.
This pin is used for detecting the presence of a broadcast station during FM band autotuning. The input frequency ranges and input conditions for determining the presence of a broadcast station are shown below.
<table>
<tr><th>Area \ Item</th><th>Input Frequency Range ①</th><th>Input Frequency Range ②</th></tr>
<tr><td>All areas</td><td>10.7 MHz ± 50 kHz</td><td>10.7 MHz ± 12.5 kHz</td></tr>
</table>
Input frequency range ① is the frequency that must be input within 20 ms after the PLL is locked.
Input frequency range ② is the frequency that must be input within 20 ms after ① was input.
When both input frequency ranges ① and ② are satisfied, a broadcast station is judged to be present and autotuning stops.</td><td>Input</td></tr>
</table>

PIN No.	SYMBOL	PIN NAME	DESCRIPTION	OUTPUT TYPE
18	MONO/NR_2	Monaural and noise reduction output	In the radio mode, this pin operates as the MONORAL signal output pin and in the tape mode, this pin operates as the NOISE REDUCTION signal output pin. • Radio mode Each time the **MONO** key is pressed on the FM and VF bands, the output is inverted. When the device is set to the MONORAL state by **MONO** key, the LCD panel "MONO" display lights and high level is output from this pin. On the MW and LW bands, this pin becomes low. When the power is turned on, this pin becomes low. • Tape mode This pin is valid when the diode matrix ENNR2 switch to be described later is 1 (shorted by diode). When NOISE REDUCTION NR_2 is selected by pressing the **NR** key or NOISE REDUCTION function key (selected by diode matrix), high level is output. At this time, the LCD panel "NR_2" display lights. In the radio monitor and DK ON modes, the "MONO" display is inverted and the MONO/NR_2 pin is made MONO output by pressing the **MONO** key. When the power is turned on, this pin becomes low.	CMOS pushpull
19	LOUD	LOUD output	LOUDNESS signal output pin. In the radio, tape, and CD modes, the output is inverted each time the **LOUD** key is pressed. When the LOUDNESS state is selected by **LOUD** key, the LCD panel "LOUD" display lights and high level is output from this pin. When the power is turned on, this pin becomes low.	CMOS pushpull
20	AMS	AMD signal output	Tape mode AMS (AUTO MUSIC SEARCH) control signal output pin. Its output is inverted each timer the **AMS** key is pressed. High level is output while the LCD panel "AMS" display is lit.	CMOS pushpull

PIN No.	SYMBOL	PIN NAME	DESCRIPTION	OUTPUT TYPE
21	MTL	Metal output	Tape mode metal signal output pin. Its output is inverted each time the **MTL** key and METAL function key (selected by diode matrix) is pressed. When the METAL state is selected with these keys, the LCD panel "MTL" display lights and high level is output from this pin. When the power is turned on, this pin becomes low.	CMOS pushpull
22	NR_1	Noise reduction output	Tape mode noise reduction (NR) signal output pin. When NR_1 is selected by the **NR** key or NOISE REDUCTION function key (selected by diode matrix), the LCD panel "NR_1" display lights and high level is output from this pin.	CMOS pushpull
23	POWER	Power output	When the CE pin is high level, the output of this pin is inverted each time the **POWER** key is pressed. When the power is turned on, low level is output. This pin can be used to turn the set power on and off, etc. See **6 "Application Circuits"**.	CMOS pushpull
24 25	XO XI	Crystal oscillator	Crystal oscillator connection pin. It connects to a 4.5 MHz crystal oscillator. When the clock function is used, the accuracy of the clock is effected by the oscillation frequency accuracy only. Adjust the oscillation frequency while observing the LCD oscillation waveform and PLL local oscillation frequency.	CMOS (XO) Input (XI)
26 58	GND_2 GND_1	Ground	Device ground pins. **Remarks** Always connect pins 26 and 58 to the same potential. GND_1 (pin 58) is analog system ground and GND_2 is digital system ground.	—

PIN No.	SYMBOL	PIN NAME	DESCRIPTION	OUTPUT TYPE
27	BEEP	Beep output	Beep output pin when momentary key pressed. A 2.25 kHz and 50 % duty square wave is output for approx. 40 ms. This time is equal to the premuting time. When a momentary key is pressed and the state of the LCD panel display or output port is changed (valid key) and at the end of 5 seconds hold during preset memory scan and scan operations, a beep is output. To disable the beep, float (leave open) this pin. The beep output is also used at SK alarm at DK standby.	CMOS pushpull
28 to 39 40 to 55	LCD_{27} to LCD_{16} LCD_{15}/KS_{15} to LCD_0/KS_0	LCD segment and key source output	LCD panel segment signal output (pins 28 to 55) and key matrix key source signal output (pins 40 to 55) pins. 56-dot display is performed at the LCD panel by matrix with the COM_1 pin (pin 56) and COM_2 pin (pin 57). Since LCD_{15}/KS_{15} (pin 40) to LCD_0/KS_0 (pin 55) share the key source signal and LCD segment signal, to use them as key source signals, a reverse current prevention diode is necessary. For the connection method, see **1.3 "Key Matrix Connection"** and **6 "Application Circuits"**.	CMOS pushpull
56 57	COM_1 COM_2	LCD common signal output	Common signal output to LCD panel. 56-dot display is performed at the LCD panel by matrix with LCD_{27} (pin 28) to LCD_0/KS_0 (pin 55).	CMOS pushpull
59 to 62	K_3 to K_0	Key return signal input	Key matrix key return signal input pin. Since the key source signal output is shared with the LCD segment signal, do not connect a pull-down resistor to this pin.	Input

<table>
<tr><th>PIN No.</th><th>SYMBOL</th><th>PIN NAME</th><th>DESCRIPTION</th><th>OUTPUT TYPE</th></tr>
<tr><td>63</td><td>SD</td><td>SD input</td><td>
Autotuning SD (Station Detector) signal input pin.
When the voltage shown below is applied to this pin during the seek operation, a broadcast station is judged to be present.
<table>
<tr><th>Band</th><th>LOCAL Mode</th><th>SD Voltage</th><th>V_{DD} = 5 V</th></tr>
<tr><td rowspan="2">FM</td><td>LOCAL</td><td>$\frac{28.5}{64} \times V_{DD}$ min.</td><td>2.227</td></tr>
<tr><td>DX</td><td>$\frac{12.5}{64} \times V_{DD}$ min.</td><td>0.977</td></tr>
<tr><td>MW</td><td>LOCAL</td><td>$\frac{15.5}{64} \times V_{DD}$ min.</td><td>1.211</td></tr>
<tr><td>LW</td><td>DX</td><td>$\frac{12.5}{64} \times V_{DD}$ min.</td><td>0.977</td></tr>
</table>
In the auto preset memory mode, search is performed twice in the LOCAL mode and once in the DX mode. The voltage to determine the presence of a broadcast station at this time is shown below.
<table>
<tr><th>Band</th><th>LOCAL Mode</th><th>SD Voltage</th><th>V_{DD} = 5 V</th></tr>
<tr><td rowspan="3">FM
LW</td><td>LOCAL
(1st time)</td><td>$\frac{44.5}{64} \times V_{DD}$ min.</td><td>3.477</td></tr>
<tr><td>LOCAL
(2nd time)</td><td>$\frac{28.5}{64} \times V_{DD}$ min.</td><td>2.227</td></tr>
<tr><td>DX
(3rd time)</td><td>$\frac{12.5}{64} \times V_{DD}$ min.</td><td>0.977</td></tr>
<tr><td rowspan="3">MW
LW</td><td>LOCAL
(1st time)</td><td>$\frac{18.5}{64} \times V_{DD}$ min.</td><td>1.445</td></tr>
<tr><td>LOCAL
(2nd time)</td><td>$\frac{15.5}{64} \times V_{DD}$ min.</td><td>1.211</td></tr>
<tr><td>DX
(3rd time)</td><td>$\frac{12.5}{64} \times V_{DD}$ min.</td><td>0.977</td></tr>
</table>
When using the IF count, a broadcast station is detected when a broadcast station is judged to be present by both IF and SD pins.
</td><td>Input</td></tr>
<tr><td>64</td><td>$\overline{ST}$</td><td>Stereo signal input</td><td>
Radio mode “ST” (STEREO) display input pin.
When low level is input to this pin, the LCD panel “ST” display lights. This pin is valid only on the FM and VF bands.
In the MONO mode, “ST” is not displayed.
</td><td>Input</td></tr>
</table>

CONTENTS

1. KEY MATRIX CONFIGURATION 16
   1.1 KEY MATRIX LAYOUT 16
   1.2 SWITCH CONNECTION 17
   1.3 KEY MATRIX CONNECTION 17
   1.4 DESCRIPTION OF KEY MATRIX 18

2. MODE TRANSITION 53
   2.1 WHEN INITIALIZE DIODE RDON = 1 (RADIO ON/OFF BY CE PIN) 53
   2.2 RADIO ON/OFF BY RDSET SWITCH 55
   2.3 DESCRIPTION OF EACH MODE 57
   2.4 RADIO ON/OFF BY [POWER] KEY 58

3. DISPLAY
   3.1 LCD PANEL 59
   3.2 FONT 59
   3.3 SEGMENT LINES 59
   3.4 COMMON LINES 59
   3.5 LCD ASSIGNMENT TABLE 60
   3.6 DESCRIPTION OF DISPLAYS 61

4. RADIO MUTE OUTPUT TIMING (RDMUTE) 63
   4.1 RADIO MUTE ($\overline{\text{RDMUTE}}$ PIN) OUTPUT TIMING CHARTS 63
   4.2 RADIO MUTE ($\overline{\text{RDMUTE}}$ PIN) AND AUDIO MUTE ($\overline{\text{AMUTE}}$ PIN) OUTPUT TIMING CHARTS 67

5. PIN I/O CIRCUITS 69

6. APPLICATION CIRCUITS 71
   6.1 POWER ON/OFF (NO CLOCK DISPLAY AT POWER OFF) BY ALTERNATE SWITCH ( ) 71
   6.2 POWER ON/OFF (CLOCK DISPLAY AT POWER OFF) BY ALTERNATE SWITCH ( ) 72
   6.3 POWER ON/OFF (CLOCK DISPLAY AT POWER OFF) BY MOMENTARY SWITCH ( ) 73

7. ELECTRICAL SPECIFICATIONS 74

8. PACKAGE DIMENSION 76

9. RECOMMENDED SOLDERING CONDITIONS 78

1. KEY MATRIX CONFIGURATION

1.1 KEY MATRIX LAYOUT

Output pin \ Input pin	K_3 (59)	K_2 (60)	K_1 (61)	K_0 (62)
LCD_{15} /KS_{15} (40)	M1 (TP1)	M2 (TP2)	M3 (TP3)	M4
LCD_{14} /KS_{14} (41)	M5	M6	VF	VF
LCD_{13} /KS_{13} (42)	SEEK DWN	SEEK UP	SCAN DWN	SCAN UP
LCD_{12} /KS_{12} (43)	BAND	—	—	—
LCD_{11} /KS_{11} (44)	ME (DISP)	MAN DWN	MAN UP	SCAN AMEMO
LCD_{10} /KS_{10} (45)	LOUD	LOC (TP4)	MONO (TP5)	—
LCD_9 /KS_9 (46)	AMS	NR	MTL	RDMONI
LCD_8 /KS_8 (47)	—	—	—	DISP
LCD_7 /KS_7 (48)	CDSET	TP SET	RD SET	POWER
LCD_6 /KS_6 (49)	SK	DK	FF	RL
LCD_5 /KS_5 (50)	AUTO500	MUTESEL	AUTOLOC	ENNR2
LCD_4 /KS_4 (51)	KAMS	KNR	KMTL	ENTPK
LCD_3 /KS_3 (52)	NOCLK	CLK DISP	FLASH	DISAMEMO
LCD_2 /KS_2 (53)	ENFMIF	DISAMIF	PRIO2	PRIO1
LCD_1 /KS_1 (54)	DISFM3	ENMW2	DISLW	M2S
LCD_0 /KS_0 (55)	AREA3	AREA2	AREA1	RDON

Momentary switch

Alternate or transistor switch

Diode matrix

— Leave open

1.2 SWITCH CONNECTION

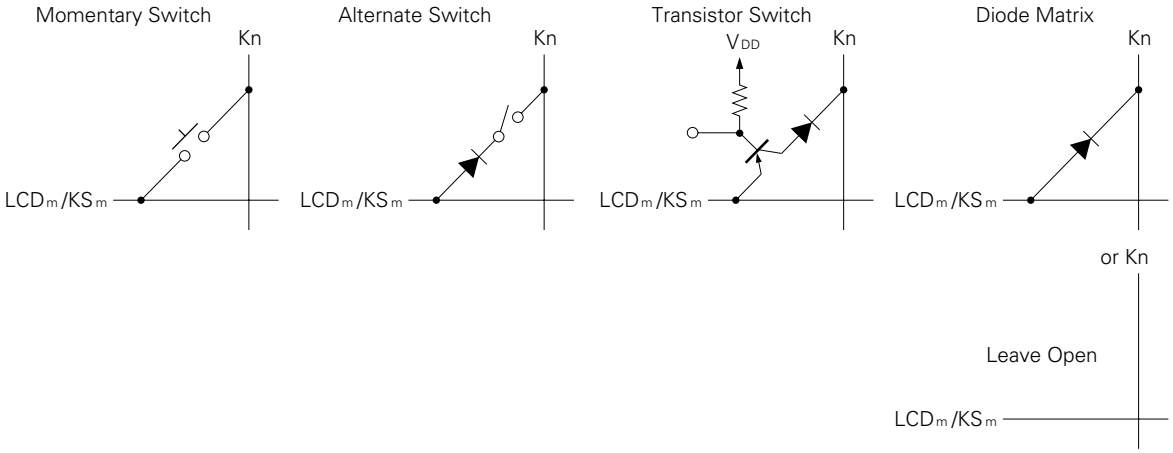

1.3 KEY MATRIX CONNECTION

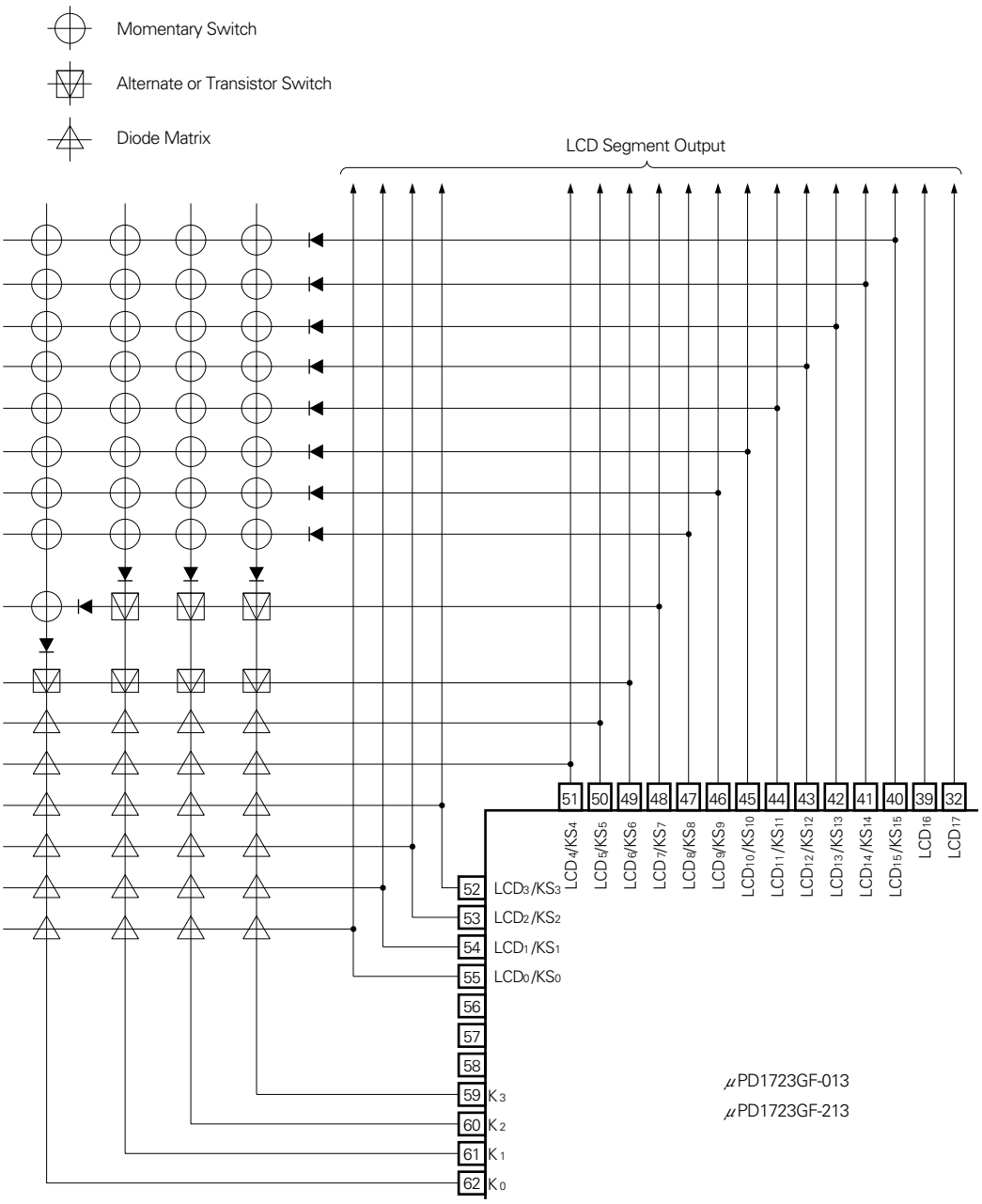

1.4 DESCRIPTION OF KEY MATRIX

1.4.1 Initialize Diode Matrix

The initialize diode matrix contains the switches shown below. These switches are read only when power is applied to the V_{DD} pin for the first time (power ON reset) and when the CE pin changed from low level to high level (CE reset). Otherwise, they are ignored.

(1) Receiving area setting switches
AREA1, AREA2, AREA3
(2) Receiving band setting switches
DISFM3, ENMW2, DISLW
(3) Auto memory setting switch
DISAMEMO
(4) IF counter setting switches
ENFMIF, DISAMIF
(5) Preset memory operation setting switch
M2S
(6) Tuning operation setting switch
AUTO500
(7) Display priority setting switches
PRIO1, PRIO2
(8) Radio ON/OFF method setting switch
RDON
(9) Clock function setting switches
NOCLK, CLKDISP, FLASH
(10) Tape function setting switches
ENTPK, KAMS, KNR, KMTL, ENNR2
(11) Muting output setting switch
MUTESEL
(12) Local operation setting switch
AUTOLOCK

Set these switches by shorting them with a diode on the matrix or leave them open. In the following text, 1 signifies shorting by diode and 0 signifies leaving open.

Symbol	Function
AREA1 AREA2 AREA3	Receiving area setting switch. Its settings are shown below. For the receiving frequencies, etc. at each area, see page 2.

AREA3	AREA2	AREA1	MODE
0	0	0	Europe 1
0	0	1	Europe 2
0	1	0	United States 1
0	1	1	United States 2
1	0	0	United States 3
1	0	1	Australia, Middle East
1	1	0	Japan
1	1	1	Central and South America

DISFM3
ENMW2
DISLW

Receiving band setting switch.
Its settings are shown below.

- DISFM3 ..... FM3 band is disabled by setting to 1.
- ENMW2 ..... MW2 band is enabled by setting to 1.
- DISLW ..... In Europe, the LW band is disabled by setting to 1.
  The DISLW switch is invalid in areas outside of Europe.

The receiving bands for each area are set with these switches as shown below.

AREA	DISFM3	ENMW2	DISLW	Receiving Bands
Europe 1, Europe 2	0	0	0	FM1, FM2, FM3, MW1, LW
	0	0	1	FM1, FM2, FM3, MW1
	0	1	—	FM1, FM2, FM3, MW1, MW2
	1	0	0	FM1, FM2, MW1, LW
	1	0	1	FM1, FM2, MW1
	1	1	—	FM1, FM2, MW1, MW2
Other areas	0	0	—	FM1, FM2, FM3, MW1
	0	1	—	FM1, FM2, FM3, MW1, MW2
	1	0	—	FM1, FM2, MW1
	1	1	—	FM1, FM2, MW1, MW2

–: Don't care

<table>
<tr><th>Symbol</th><th>Function</th></tr>
<tr><td>M2SENMW2
DISLW</td><td>Preset memory write method setting switch.
Its settings are shown below.
<table>
<tr><th>M2S</th><th>Write Method</th></tr>
<tr><td>0</td><td>Preset memory is written by pressing a [M1 (TP1)] to [M6] key in the 5 seconds memory write state by [ME] key.</td></tr>
<tr><td>1</td><td>Preset memory is written by holding down a [M1 (TP1)] to [M6] key for more than 2 seconds. The [ME] key is invalid.</td></tr>
</table>
For more information, see the [ME] and [M1 (TP1)] to [M6] items.</td></tr>
<tr><td>AUTO500</td><td>[MAN UP] and [MAN DWN] keys function setting switch. The [MAN UP] and [MAN DWN] keys can also be used as autotuning (seek operation) keys by means of this switch. The settings of this switch are shown below.
<table>
<tr><th>AUTO500</th><th>[MAN UP], [MAN DWN] Key Function</th></tr>
<tr><td>0</td><td>Manual tuning only.
Each time the key is pressed, the channel is incremented or decremented by one. When the key is held down for more than 0.5 seconds, the channel is changed continuously and rapidly.</td></tr>
<tr><td>1</td><td>Manual tuning and autotuning.
Each time the key is pressed, the channel is incremented or decremented by one. When the key is held down for more than 0.5 seconds, autotuning (seek operation) is performed from the next channel.</td></tr>
</table></td></tr>
</table>

Symbol	Function
AUTOLOC	Local function setting switch. Its settings are shown below.

AUTOLOC	Local Function
0	LOCAL ON/OFF by key input. Each time the **LOC** key pressed, the "LOC" display is inverted. LOCAL output outputs high level only during autotuning (SEEK, SCAN, AMEMO).
1	Auto local. The **LOC** key is invalid. When autotuning is selected by **SEEK UP**, **SEEK DWN**, **SEEK UP**, **SEEK DWN**, **AMEMO** keys, the "LOC" display lights and the LOCAL output becomes high and autotuning is performed. When autotuning is performed for one cycle, the device searches in the DX mode ("LOC" display OFF, LOCAL output = Low). However, the device enters the LOCAL1, LOCAL2 or DX mode only during auto memory operation. At other than autotuning, the "LOC" display goes off and the LOCAL output becomes low. If the same key (**SEEK UP** key for the seek-up operation, etc.) is pressed during autotuning, if the device is in the LOCAL mode, it searches in the DX mode, beginning from the frequency at which autotuning started. If the device is in the DX mode, autotuning stops. When AUTO500 switch is set to "1" (autotuning by pressing **MAN UP** or **MAN DWN** key for 0.5 second) when auto local is used, the following operations are performed: Auto local search (LOCAL) mode is performed by pressing the **MAN UP** or **MAN DWN** key for more than 0.5 seconds. When the **MAN UP** or **MAN DWN** key is pressed again during LOCAL search and the 2nd DX search, autotuning stops.

Symbol	Function
PRIO1 PRIO2	Priority display setting switch. "Priority display" is display that returns to the previous display if no operation is performed within 5 seconds after the display was switched. These switches are valid only when the NOCLK switch is set to 0 (clock mode) when the device is not in the DK standby mode and radio monitor is not used. Their settings are shown below.

PRIO1	PRIO2	Priority Display	Description
0	0	None	Display switching is performed when the **DISP** key and melody selection key (during clock display) was operated. • Radio mode The display switches between frequency display and clock display each time the **DISP** key is pressed. When the melody selection key is pressed during clock display, the display switches to frequency display. • Time mode The **DISP** key is disabled. • CD mode The display is switched between "1̄ 0̄" display and clock display each time the **DISP** key is pressed.
1	0	Frequency CD	When the display switched from frequency or "1̄ 0̄" display to clock display by **DISP** key, if no operation is performed within 5 seconds, the display returns to the original display. • Radio mode Normally the frequency is displayed. The display is switched to 5 seconds clock display by pressing the **DISP** key. When the **DISP** key is pressed again, or the melody selection key is pressed, during 5 seconds clock display, the display returns to frequency display. • Tape mode Clock display. The **DISP** key is invalid. • CD mode Normally "1̄ 0̄ " is displayed. The display is switched to 5 seconds clock display by pressing the **DISP** key. When the **DISP** key is pressed again during 5 seconds clock display, the display returns to CD display.

Symbol	Function
PRIO1 PRIO2	

PRIO1	PRIO2	Priority Display	Description
0	1	Clock	In the radio and CE modes, clock display has priority. • Radio mode Normally the clock is displayed. The display is switched to 5 seconds frequency display by pressing the **DISP** key or melody selection key. When the **DISP** key is pressed again during 5 seconds frequency display, the display returns to clock display. • Tape mode The **DISP** key is invalid. • CD mode Normally the clock is displayed. The display is switched to 5 seconds "$\overline{\text{I}}_{\text{I}}$" display by pressing the **DISP** key. When the **DISP** key is pressed again during 5 seconds "$\overline{\text{I}}_{\text{I}}$" display, the display returns to clock display.
1	1	—	Do not set to this mode.

"Frequency display" in the above means receiving frequency, receiving band, and preset memory display. Therefore, during radio reception, the 'PSCAN', 'SK', 'VF', 'ST', 'MONO', 'LOCAL', and 'LOUD' displays light even at clock display.
In the tape mode, the 'LOUD', 'MTL', 'NR_1', 'NR_2', 'AMS', '▷', and '◁' displays also light at clock display.

Symbol	Function			
	PRIO1	PRIO2	Priority Display	Description
PRIO1 PRIO2	0	0	None	• Tape DK standby • Radio monitor The display switches between frequency display and clock display each time the **DISP** key is pressed. When the melody selection key is pressed during clock display, the display switches to frequency display. When the device entered the tape DK standby and radio monitor standby mode, frequency display displayed first. • CD DK standby • Radio monitor The display switches between frequency display, "1̄_0̄" display and clock display each time the **DISP** key is pressed. When the melody selection key is pressed during "1̄_0̄" display and clock display, the display switches to frequency display. When the device entered the CD DK standby and radio monitor mode, frequency display is displayed first. • DK ON Frequency displayed. The **DISP** key is invalid.
	1	0	Frequency CD	• Tape DK standby • Radio monitor Normally the frequency is displayed. The display is switched to 5 seconds clock display by pressing the **DISP** key. When the **DISP** key or the melody selection key is pressed during 5 seconds clock display, the display returns to frequency display. • CD DK standby • Radio Monitor Normally "1̄_0̄" is displayed. When the **DISP** key is pressed, the display switches to 5 seconds frequency display. When the **DISP** key is pressed during frequency display, the display switches to 5 seconds clock display. When the **DISP** key is pressed during clock display, the display returns to "1̄_0̄" display. When the melody selection key is pressed during "1̄_0̄" and clock display, the display switches to 5 seconds frequency display. • DK ON Frequency display The **DISP** key is invalid.

<table>
<tr><th>Symbol</th><th>Function</th></tr>
<tr><td>PRIO1
PRIO2</td><td>
<table>
<tr><th>PRIO1</th><th>PRIO2</th><th>Priority Display</th><th>Description</th></tr>
<tr><td>0</td><td>1</td><td>Clock</td><td>• Tape DK standby
• Radio monitor
Normally the clock is displayed.
When the DISP key or melody selection key is pressed, the display switches to 5 seconds frequency display.
When the DISP key is pressed during 5 seconds frequency display the display returns to clock display.
• CD DK standby
• Radio monitor
Normally the clock is displayed.
When the DISP key is pressed, the display switches 5 seconds “1̄.0̄” display. When the DISP key is pressed during this “1̄.0̄” display, the display switches to 5 seconds frequency display.
When the DISP key is pressed during frequency display, the display returns to clock display.
When the melody selection key is pressed during clock display or “1̄.0̄” display, the display switches to 5 seconds frequency display.
• DK ON
Frequency display.
The DISP key is invalid</td></tr>
<tr><td>1</td><td>1</td><td>—</td><td>Do not set to this mode.</td></tr>
</table>
At no clock (NOCLK = 0), the following is displayed and the DISP key becomes invalid without regard to the setting of the PRIO1 and PRIO2 switches.
And the DISP key is invalid.
<table>
<tr><th>Mode</th><th>Display</th></tr>
<tr><td>Radio</td><td>Frequency</td></tr>
<tr><td>Tape</td><td>None</td></tr>
<tr><td>CD</td><td>1̄.0̄</td></tr>
<tr><td>Tape DK standby
CD DK standby
DK ON
Radio monitor</td><td>Frequency</td></tr>
</table>
</td></tr>
<tr><td>RDON</td><td>Radio ON/OFF method setting switch.
Its settings are shown below.
<table>
<tr><th>RDON</th><th>Radio ON/OFF Method</th></tr>
<tr><td>0</td><td>Radio is turned on and off by RDSET switch.</td></tr>
<tr><td>1</td><td>Radio is turned on by making the CE pin High.</td></tr>
</table>
When this switch was set to 1, do not use the RDSET switch.</td></tr>
</table>

<table>
<tr><th>Symbol</th><th>Description</th></tr>
<tr><td>NOCLK</td><td>Clock specified setting switch.
Its settings are shown below.
<table>
<tr><th>NOCLK</th><th>Clock</th></tr>
<tr><td>0</td><td>Yes</td></tr>
<tr><td>1</td><td>No</td></tr>
</table>
In the no-clock mode, low consumption current (10 μA max.) backup is possible by making the CE pin Low.</td></tr>
<tr><td>CLKDISP</td><td>Clock time system setting switch.
Its settings are shown below.
<table>
<tr><th>CLKDISP</th><th>Time System</th></tr>
<tr><td>0</td><td>12-hour clock
→ AM11:59 → PM12:00
AM12:00 ← PM11:59 ←</td></tr>
<tr><td>1</td><td>24-hour clock
23:59 → 0:00</td></tr>
</table></td></tr>
<tr><td>FLASH</td><td>Clock colon (:) display setting switch.
Its settings are shown below.
<table>
<tr><th>FLASH</th><th>Colon (:) Display</th></tr>
<tr><td>0</td><td>Steady light</td></tr>
<tr><td>1</td><td>Flashing
Frequency: 1 Hz
Duty: 6 (ON): 4 (OFF)</td></tr>
</table></td></tr>
</table>

Symbol	Function
ENTPK KAMS KNR KMTL	Switches for using the tape functions (ANS, NR, MTL) in common with the radio function keys. The keys that can be used in common can be selected as shown below.

ENTPK	Function
0	The [M1 (TP1)], [M2 (TP2)], and [M3 (TP3)] keys can be used as the AMS, NR, MTL function keys. The keys that can be selected as shown below.

KAMS	KNR	KMTL	Dual-Function Keys		
			M1 (TP1)	M2 (TP2)	M3 (TP3)
1	1	1	AMS	NR	MTL
1	1	0	AMS	NR	—
1	0	1	AMS	MTL	—
1	0	0	AMS	—	—
0	1	1	NR	MTL	—
0	1	0	NR	—	—
0	0	1	MTL	—	—
0	0	0	—	—	—

That is, the functions selected by 1 are left-justified and used at the [M1 (TP1)] to [M3 (TP3)] keys.

ENTPK	Function
1	Of the AMS, NR and MTL function keys, two functions can be used at the [LOC (TP4)] and [MONO (TP5)] keys. The following can be selected:

KAMS	KNR	KMTL	Dual Function-Key	
			LOC (TP4)	MONO (TP5)
1	1	1	Do not set	
1	1	0	AMS	NR
1	0	1	AMS	MTL
1	0	0	AMS	—
0	1	1	NR	MTL
0	1	0	NR	—
0	0	1	MTL	—
0	0	0	—	—

The functions selected by 1 are left-justified and used at the [LOC (TP4)] and [MONO (TP5)] keys.

Symbol	Function
ENTPK KAMS KNR KMTL	The operation of each key is the same as that of the momentary keys **AMS**, **NR**, and **MTL**. Summarizing the above, the five keys **M1 (TP1)** to **M3 (TP3)**, **LOC (TP4)**, and **MONO (TP5)** can be used as tape function keys. Which functions are used in common are determined by the ENTPK, KAMS, KNR and KMTL switches. This is summarized below.

ENTPK	KAMS	KNR	KMTL	M1 (TP1)	M2 (TP2)	T3 (TP3)	LOC (TP4)	MONO (TP5)
0	1	1	1	AMS	NR	MTL		
	1	1	0	AMS	NR			
	1	0	1	AMS	MTL			
	1	0	0	AMS				
	0	1	1	NR	MTL			
	0	1	0	NR				
	0	0	1	MTL				
	0	0	0					
1	1	1	1	← Do not set.				
	1	1	0				AMS	NR
	1	0	1				AMS	MTL
	1	0	0				AMS	
	0	1	1				NR	MTL
	0	1	0				NR	
	0	0	1				MTL	
	0	0	0					

When these functions are used, tuning operations in the tape DK standby, CD DK standby and radio monitor, and DK ON modes are restricted as follows:

ENTPK	KAMS	KNR	KMTL	
0	0	0	0	Normal tuning possible.
0	When even one switch is 1			Tuning by **M1 (TP1)** to **M6** key is possible.
1	—	—	—	The **LOC (TP4)** and **MONO (TP5)** keys cannot be used as local and monaural keys.
	—	—	—	

Symbol	Function

ENNR2

Switch that enables the NR_2 (Noise Reduction) function in the tape mode.
Its settings are shown below.

ENNR2	Description
0	NR_2 function cannot be used. When the **NR** key or NR function key (selected by KNR switch) is pressed, the LCD panel "NR_1" display and NR_1 pin output changes as follows: → "NR_1" display OFF, NR_1 pin Low output → "NR_1" display ON, NR_1 pin High output →
1	Both the NR_1 and NR_2 functions can be used. When the **NR** key or NR function key (selected by KNR switch) is pressed, the LCD panel "NR_1" and "NR_2" displays and NR_1 and MONO/NR_2 pins output change as follows: → "NR_1" display OFF, NR_1 pin Low output, "NR_2" display OFF, MONO/NR_2 pin Low output → "NR_1" display ON, NR_1 pin High output, "NR_2" display OFF, MONO/NR_2 pin Low output → "NR_1" display OFF, NR_1 pin Low output, "NR_2" display ON, MONO/NR_2 pin High output →

MUTESEL

Sets the $\overline{\text{RDMUTE}}$ pin output method in the tape and CD modes.
Its settings are shown below.

MUTESEL	$\overline{\text{RDMUTE}}$ Pin Output
1	• In the tape and CD modes, muting is turned off. 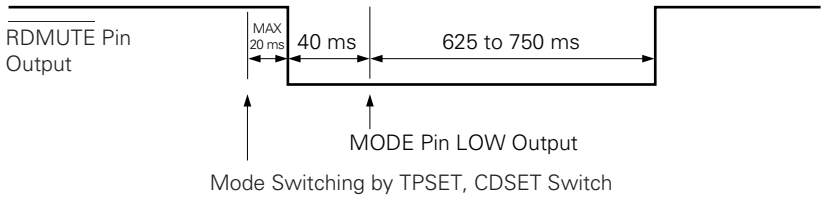 When MUTESEL = 1 is set, do not use the DK standby and radio monitor functions.
0	• In the tape and CD modes, muting remains ON. 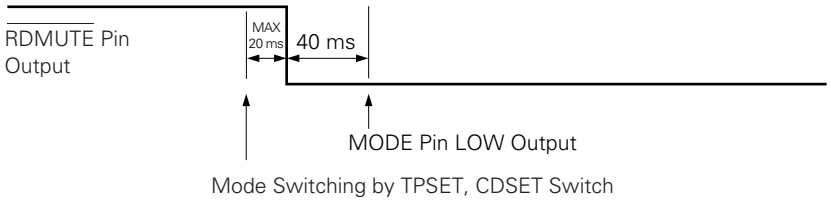

For details, see **4 "Radio Mute Output Timing"**.

<table>
<tr><th>Symbol</th><th>Function</th></tr>
<tr><td>ENFMIF
DISAMIF</td><td>IF counter use setting switch.
Its settings are shown below.
<table>
<tr><th>ENFMIF</th><th>DISAMIF</th><th>Band</th><th>Broadcast Station Detection Method</th></tr>
<tr><td rowspan="2">1</td><td rowspan="2">O</td><td>FM</td><td>IF counter and SD system</td></tr>
<tr><td>MW, LW</td><td>IF counter and SD system</td></tr>
<tr><td rowspan="2">1</td><td rowspan="2">1</td><td>FM</td><td>IF counter and SD system</td></tr>
<tr><td>MW, LW</td><td>SD system</td></tr>
<tr><td rowspan="2">0</td><td rowspan="2">0</td><td>FM</td><td>SD system</td></tr>
<tr><td>MW, LW</td><td>IF counter and SD system</td></tr>
<tr><td rowspan="2">0</td><td rowspan="2">1</td><td>FM</td><td>SD system</td></tr>
<tr><td>MW, LW</td><td>SD system</td></tr>
</table></td></tr>
<tr><td>DISAMEMO</td><td>Auto preset memory function disable switch.
Its settings are shown below.
<table>
<tr><th>DISAMEMO</th><th>Description</th></tr>
<tr><td>0</td><td>Enables the auto preset memory function.
When the PSCAN AMEMO key is pressed for more than 2 seconds, auto preset memory operation begins.</td></tr>
<tr><td>1</td><td>Disables the auto preset memory function.
The PSCAN AMEMO key performs the preset scan function only.</td></tr>
</table></td></tr>
</table>

1.4.2 Alternate or Transistor Switch

<table>
<tr><th>Symbol</th><th>Function</th></tr>
<tr><td>CDSET</td><td>CD mode setting switch.
This switch is valid only when the CE pin is high level.
The CD mode can be set by setting this switch to ON.
For details, see 2 “Mode Transition”.</td></tr>
<tr><td>TPSET</td><td>Tape mode setting switch.
This switch is valid only when the CE pin is high level.
When this switch is set to ON when the CSDSET is OFF, the device is set to the tape mode.
For details, see 2 “Mode Transition”.</td></tr>
<tr><td>RDSET</td><td>Radio mode setting switch.
This switch is valid only when the CE pin is high level.
When this switch is set to ON when the CDSET and TPSET switches are OFF, the device is set to the radio mode.
For details, see 2 “Mode Transition”.
When using this switch, set the RDON switch (diode matrix) to 0.</td></tr>
<tr><td>FF</td><td>Tape mode fast forward signal input switch.
The tape fast forward display (◁ ▷) lights as shown below according to the state of the RL switch.
<table>
<tr><th>FF</th><th>RL</th><th>Display</th></tr>
<tr><td rowspan="2">0</td><td>0</td><td>◀ ▷</td></tr>
<tr><td>1</td><td>◁ ▶</td></tr>
<tr><td rowspan="2">1</td><td>0</td><td>◀ ▷</td></tr>
<tr><td>1</td><td>◁ ▶</td></tr>
</table>
▷ : Light OFF, ▶ : Light ON, ▶ : Flash (2 Hz)
0: OFF, 1: ON</td></tr>
<tr><td>SK</td><td>VF broadcast station SK signal input switch.
When this switch is set to ON on the FM and VF bands, the LCD panel “SK” display lights.
On the FM and VF bands, this signal is also used as the auto tuning stop signal. At this time, 250 to 375 ms after the broadcast station is judged to be present by IF and SD pin, this switch is checked and if it is ON, a traffic information station is judged to be present and autotuning stops.</td></tr>
<tr><td>RL</td><td>Tape mode travel direction signal input switch.
The tape travel display (◁ ▷) lights according to the state of the FF switch. For the lighting contents, see the FF switch above.</td></tr>
<tr><td>DK</td><td>VF broadcast station DK signal input switch.
When this switch is set to ON in the tape DK standby and CD DK standby modes, the device enters the tape DK ON and CD DK ON mode.</td></tr>
</table>

1.4.3 Momentary Keys

Symbol	Function
M1 (TP1) M2 (TP2) M3 (TP3) M4 M5 M6	In the radio mode, these keys are used to call and write preset memory. In the tape mode, these are used as tape function keys by initialize diode (ENTPK, KAMS, KNR, KMTL). • Radio mode Preset memory call and write keys. One key can memorize the FM1, FM2, FM3, VF, MW1, MW2, and LW bands independently (max. 6 bands). The following operations are performed according to the state of M2S of the initialize diodes:

M2S		Description
0	Write	The device is placed into the 5 seconds preset memory write mode by pressing the **ME** key during frequency display. When one of the keys **M1 (TP1)** to **M6** is pressed during this 5 seconds, the current receiving frequency is written to the preset memory corresponding to the pressed key. When the **ME** key is held down, writing is not performed. During writing, radio muting is not output. **Example** 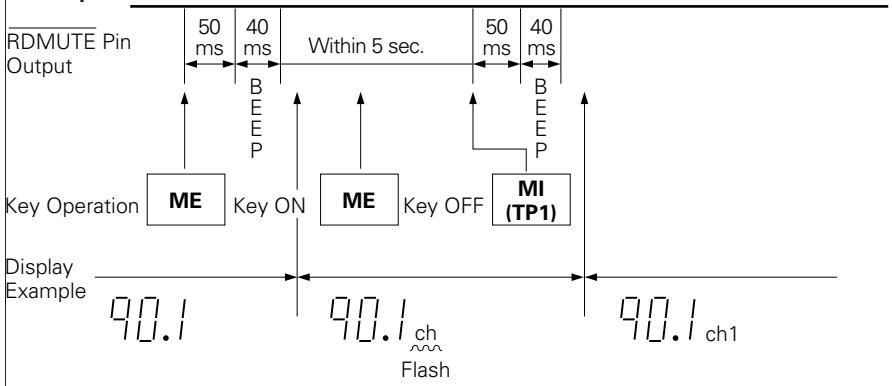 When the same preset memory key is pressed while the current preset memory contents are being received, the same operation is performed.
	Call	In the radio mode, when the device is in the memory unwritable state, when one of the **M1 (TP1)** to **M6** keys is pressed, the preset memory contents corresponding to the pressed key can be called. **Example** 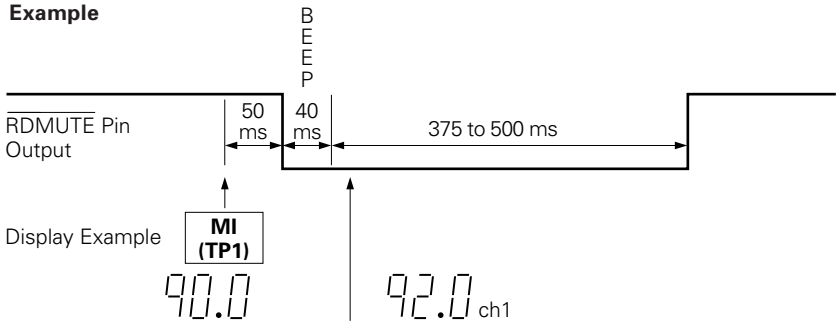 When the same preset memory key is pressed while the current preset memory contents are being received, no operation is performed. However, if the clock is being displayed, BEEP is output and the display switches to frequency display. Radio muting is not output.

Symbol	Function

M1 (TP1), **M2 (TP2)**, **M3 (TP3)**, **M4**, **M5**, **M6**

M2S		Description
1	Write	When one of the key **M1 (TP1)** to **M6** is pressed for more than 2 seconds, the preset memory corresponding to the pressed key is written. At the end of writing to the preset memory, radio muting is output as acknowledgment. 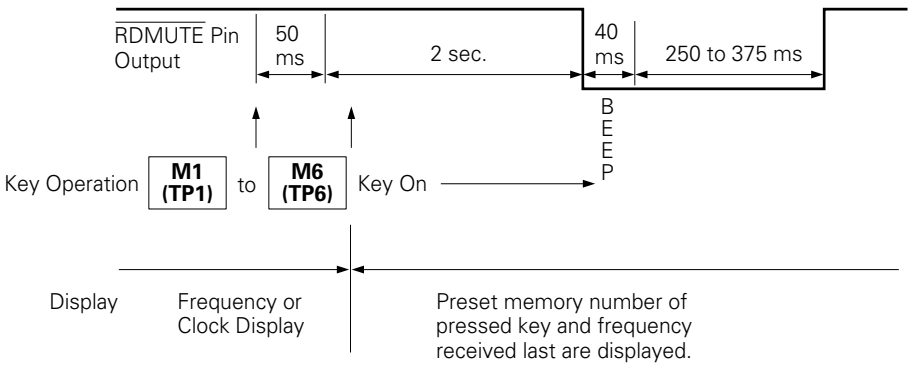 When the same preset memory key is pressed while the current preset memory contents are being received, nothing is performed. However, if the clock is being displayed, BEEP is output when the key is released or after 2 seconds and the display switches to frequency display. At this time, radio muting is not output. If a key is pressed during the seek operation, the call operation is immediately performed (2-second count is ignored).
	Call	When a **M1 (TP1)** to **M6** key is pressed and released within 2 seconds, the preset memory contents at the time the key was released are called. 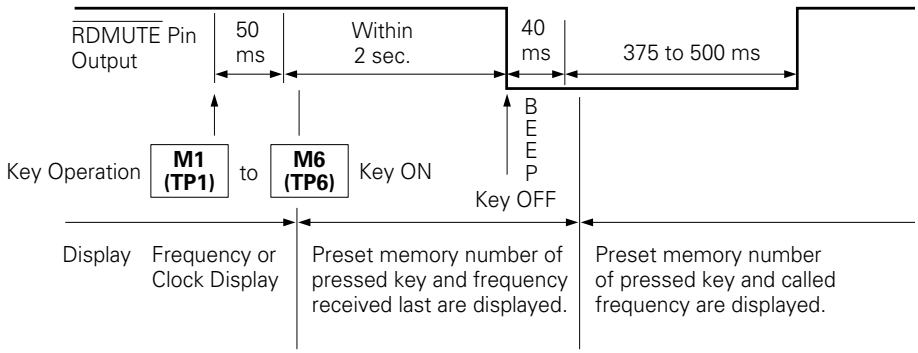 When the same preset memory key is pressed while the current preset memory contents are being received, nothing is performed. However, if the clock is being displayed, BEEP is output and the display switches to frequency display. Radio muting is not output. If a key is pressed during the seek operation, the call operation is immediately performed.

Symbol	Function
M1 (TP1) M2 (TP2) M3 (TP3) M4 M5 M6	When the power is turned on, the frequency shown below are written to M1 to M6 to facilitate set adjustment.

Area \ Band \ Memory		M1E	M2	M3	M4	M5	M6
Europe 1 Europe 2	FM1	87.5	87.7	92.3	96.3	105.9	87.5
	MW1	522	603	954	1386	522	522
	MW2	522	621	1098	1530	522	522
	LW	144	155	208	256	144	144
United States 1, United States 2, United States 3	FM1	87.5	87.9	97.1	105.1	87.5	87.5
	MW1	530	620	1010	1490	530	530
Australia, Middle East	FM1	87.5	87.9	97.1	105.1	87.5	87.5
	MW1	531	612	963	1395	531	531
Japan	FM1	76.0	76.4	85.6	76.0	76.0	76.0
	MW1	522	603	954	1386	522	522
Central and South America	FM1	87.5	87.9	97.1	105.1	87.5	87.5
	MW1	520	565	760	1000	1400	520

The lowest frequency of each area is M1 to M6 of the FM2, FM3, VF, and MW2 bands of other than Europe 1 and 2.

- Tape mode
  These keys can be used as tape function keys by means of initialize diode matrix switches ENTPK, KAMS, and KMTL.
  For the keys that can be used, see the diode matrix. For a description of each key operation, see the **AMS**, **NR**, and **MTL** key items.

Symbol	Function
VF	VF (traffic information) broadcast station search key. Its operation is described below. When this key is pressed in the radio mode (FM, MW, or LW band), the LCD panel "VF" display and Band2 pin output are inverted. When this key is pressed, the VF band is selected and 375 to 500 ms later, whether or not there is a broadcast station (IF count and SD check) and SK signal are detected. If no VF broadcast station is judged not to be present (The presence of a VF broadcast station is determined by the presence of an IF count, SD signal, and SK signal), autotuning starts from that frequency. When the first broadcast station is detected, that frequency is held until the autotuning key is pressed thereafter, even when there is no SK signal. When the IF count and SD check are judged to be present, the autotuning operation is the same as normal autotuning, except that the SK signal is detected after 375 to 500 ms. Autotuning (seek up) is performed automatically only when the VF band is selected by **VF** key for the first time. Autotuning is not performed automatically even if another tuning key (other than autotuning) is pressed.

Symbol	Function
VF	To reset the VF band, press the VF key or BAND key. The VF band has 6 independent memories. The last channel is also independent. When the device is set to the tape or CD mode by TPSET or CDSET switch while on the VF band, it switches to the DK standby mode. The device also switches to the DK standby mode when the VF key is pressed in the tape or CD mode. In the DK standby mode, all the keys, other than the BAND key, are valid. When the DK switch is set to ON in the DK standby mode, the device switches to the DK ON mode. In the DK ON mode, radio muting ($\overline{\text{RDMUTE}}$ pin) is turned off and audio muting ($\overline{\text{AMUTE}}$ pin) is turned on. When both the SD and SK signals or one of signals are lost during VF band reception (including TAPE or CD DK standby mode), BEEP is output. The SD and SK signals are checked 512 times once every 30 ms and if there are no SD and SK signals for 256 times or more, BEEP is output. For BEEP, 120 ms ON and 120 ms OFF are output 5 times, respectively.
PSCAN AMEMO	Preset memory scan and auto store memory key. The auto store memory function is enabled when initialize diode DISAMEMO is 0. When the auto store memory is used (DISAMEMO = 0), when this key is pressed and released within 2 seconds, preset memory scanning is performed. When this key is held down for more than 2 seconds, operation switches to auto store memory operation. When the auto store memory is not used (DISAMEMO = 1), the preset memory scanning operation starts the moment the button is pressed. The preset memory scan and auto store memory operations are described below. **(1) Preset memory scan operation** The preset memory contents are called automatically every 5 seconds. If other than the current preset memory is being received, the preset memories are called from M1, and if a present memory is being received, the preset memories are called from the next preset memory (for instance, from M4 if M3 is being received) sequentially every 5 seconds. This operation is shown below. **Example** When FM1 band being received FM1 → M1→M2→M3→M4→M5→M6 Other than preset memory being received on FM1 band M3 being received on FM1 band This operation is the same for the MW bands (MW1, MW2) and LW band.

Symbol	Function
PSCAN AMEMO	When the next preset memory is called at the end of 5 second hold, BEEP is output. During 5-second hold, the preset memory number display flashes at 1 Hz (duty 50 %). The "ch" display does not flash. To stop at that preset memory during 5-second hold, press this key again, or press the same preset memory key as the preset memory being received. Writing of preset memory (for example, writing to M5 during M1 hold) is also possible, but the preset memory scan operation ends when the preset memory was written. The preset memory write operation during 5 second hold is described below.

M2S	Description
0	When the **ME** key is pressed, the device enters the 5-second memory write mode. Writing is performed by pressing a **M1 (TP1)** to **M6** key in the memory writable mode. At the end of writing, auto preset memory scanning stops. In the memory writable mode, the "ch" display flashes. If no operation is performed within 5 seconds, the next preset memory channel is called and auto preset scanning continues. If the **ME** key is pressed again in the memory writable mode, the memory writable mode is canceled and the next channel is called 5 seconds after the key was pressed.
1	When a **M1 (TP1)** to **M6** key is pressed for more than 2 seconds, the frequency currently being received is written to the preset memory corresponding to the pressed key. Auto preset scanning ends when the frequency was written to the preset memory (2 seconds after the key was pressed).

When one of the following keys is pressed during preset memory scanning, preset memory scanning stops and the operation of the pressed key is performed.

MAN UP, **MAN DWN**, **SEEK UP**, **SEEK DWN**
SCAN UP, **SCAN DWN**, **VF**

Memory call key other than memory being received (held)

Band switching key

When one of the following keys is pressed during preset memory scanning, after the operation of the pressed key is performed, preset memory scanning is continued.

LOUD, **LOC (TP4)**, **MONO (TP5)**

Symbol	Function

Example) FM band (FM1, M1 = 76.0 MHz, M2 = 80.0 MHz, M3 = 90.0 MHz), M4 = 88.0 MHz, M2S = 0

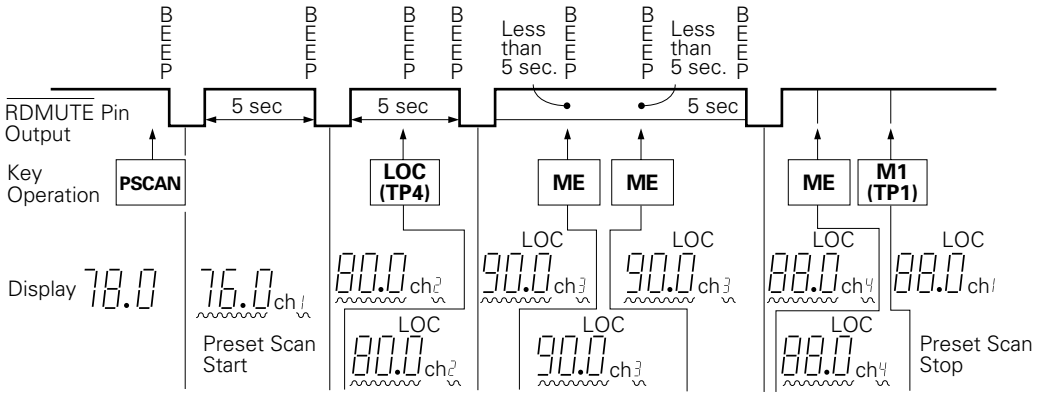

(2) Auto store memory

This operation searches for a broadcast station and writes it to preset memory automatically.

Broadcast station search is performed in the up direction, starting from the frequency currently being received.

If the preset memory channel which is written is receiving the current preset memory, it is incremented from the preset memory channel being received (from M3 if M3 is being received). If a channel other than a preset memory channel is being received, the preset memory channel which is written is incremented from M1. When broadcast stations are stored up to M6, the auto store memory operation ends.

PSCAN AMEMO

The auto store memory operation broadcast station search method in the LOCAL mode and DX mode differs as shown below.

- DX mode

The frequencies are searched in the up direction, starting from the frequency currently being received, and ends when the preset memories are written up to M6 or all the search frequencies were searched once.

Example 1) Japan, FM band 78.0 MHz (M3) reception

Frequency	78.0	78.1	Seek	80.0	80.1	82.5	84.7	87.9	80.0
	→		→·····→	→	→·····→		→·····→	→	→
Display	ch3	↑ch3		ch3	ch4	ch4	ch5	ch6	
Operation	PSCAN AMEMO			Station M3 Write	Station M4 Write	Station M5 Write	Station M6 Write	↑Auto Memory Stop	

Example 2) Japan, FM band 78.0 MHz reception

Frequency	78.0	78.1	Seek	90.0	76.0	77.9	78.0
		→·····	→	→	→·····	→	
Display	↑ch1		No Station	ch1	ch1	ch1 ↑	
Operation	PSCAN AMEMO					1 Cycle No Station	↑Auto Memory Stop

For auto store memory in the DX mode, the SD pin broadcast station detection level is:

Symbol	Function

Band	Lowest Voltage to Determine the Presence of Station
FM MW LW VF	$\frac{12.5}{64} \times V_{DD}$ 0.977 V at V_{DD} = 5 V

- LOCAL mode

  The frequencies are searched in the up direction, starting from the frequency currently being received.

  In the LOCAL mode, the SD detection level is changed and the frequencies are searched twice. In the DX mode, the frequencies are searched once. When the preset memories are written up to M6 during this time or at the end of 3 searches, the auto store memory operation ends.

  Example) Japan, AM band 1422 kHz reception

PSCAN AMEMO

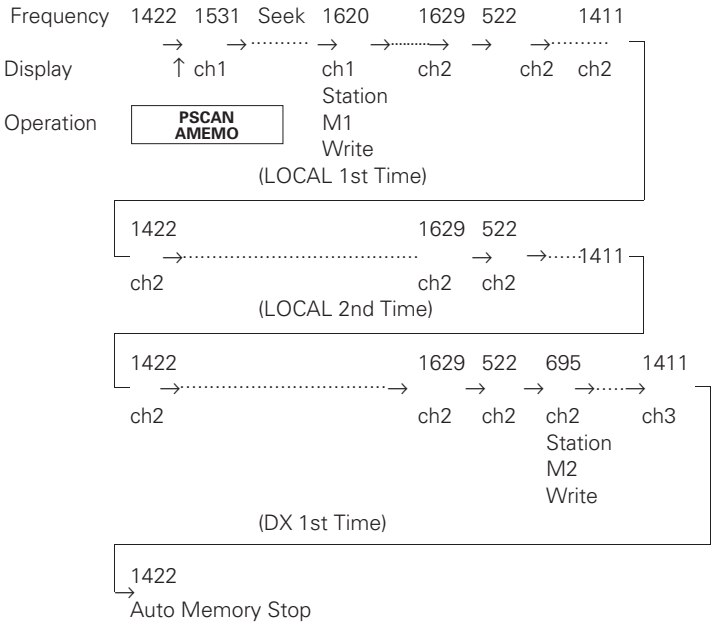

The SD detection level for LOCAL mode auto store memory is:

Band	Mode	Lowest Voltage Judged a Broadcast Station	
FM VF	LOCAL 1st time	$\frac{44.5}{64} \times V_{DD}$	3.477 V at V_{DD} = 5 V
	LOCAL 2nd time	$\frac{28.5}{64} \times V_{DD}$	2.277 V at V_{DD} = 5 V
	DX 1st time	$\frac{12.5}{64} \times V_{DD}$	0.977 V at V_{DD} = 5 V
MW LW	LOCAL 1st time	$\frac{18.5}{64} \times V_{DD}$	1.445 V at V_{DD} = 5 V
	LOCAL 2nd time	$\frac{15.5}{64} \times V_{DD}$	1.211 V at V_{DD} = 5 V
	DX 1st time	$\frac{12.5}{64} \times V_{DD}$	0.977 V at V_{DD} = 5 V

Symbol	Function
PSCAN AMEMO	When the auto local function is used, each time the PSCAN AMEMO key is pressed, the local mode is switched as shown below. LOCAL1 → LOCAL2 → DX → auto memory stop When the local mode is switched, the auto memory operation is repeated from the frequency at which is started. When the auto memory operation was stopped, if even one broadcast station was written, operation shifts automatically from the preset memory when the auto memory operation started to preset scan operation.
SEEK UP SEEK DWN	Autotuning (seek operation) key. The frequencies are incremented (SEEK UP key) or decremented (SEEK DWN key) in 1 channel space and whether or not there is a broadcast station (IF count and SD signal) is detected at each receiving frequency and when there is a broadcast station, that frequency is held. On the VF band, when there is judged to be a broadcast station by IF count and SD signal, the SK switch is checked 250 to 375 ms later and if there is an SK signal, that frequency is held. When seek up (seek down) reaches the highest (lowest) frequency, it returns to the lowest (highest) frequency and, that is, sawtooth wave mode tuning is performed. The channel seek up (seek down) operation is shown below:

Seek Up	Seek Down
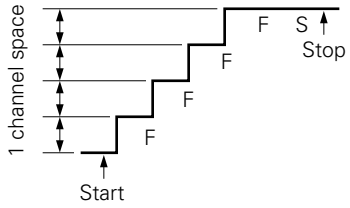	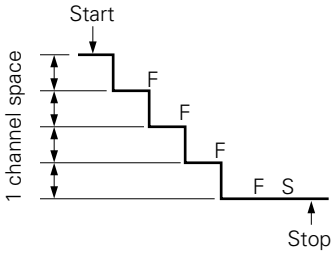

For the S (slow) and F (fast) IF count conditions, see the FMIF pin and AMIF pin above.

For the 1 channel space frequency width, see the receiving frequencies above.

When band switching is performed during the seek operation (no broadcast station), when switching returns to the same band and when the radio is turned off (including mode switching) and then turned back on, the frequency at which seek started is received.

The keys that are valid during the seek operation are shown in the following table.

Keys that are not shown are invalid. (POWER key is valid.)

When using the SEEK UP and SEEK DWN keys, set the AUTO500 switch (diode matrix) to 0.

Symbol	Function
SEEK UP SEEK DWN	When the auto local function is used, the local mode is switched as shown below each time the **SEEK UP** or **SEEK DWN** key is pressed. LOCAL → DX → seek operation stop When the local mode is switched, seek is repeated from the frequency at which it started.

Key	Operation
SEEK UP **SEEK DWN**	• **SEEK UP** key during seek up and **SEEK DWN** key during seek down Seek stops and returns to the frequency at which it started. However, when the auto local function is used, the local mode is switched. • **SEEK DWN** key during seek up and **SEEK UP** key during seek down Shifts to the operation of the pressed key (to seek down during seek up) from the frequency when the key was pressed. Key transfer operation is also enabled.
SCAN UP **SCAN DWN**	Scan up (scan down) operation starts from the frequency when the key was pressed.
MAN UP **MAN DWN**	Seek operation stops and returns to the frequency when seek started.
BAND	Seek operation stops and the band is switched sequentially as shown below. → FM1 → FM2 → FM3 → MW1 → MW2 → LW However, bands disabled by receiving area and DISFM3, ENMW2, and DISLW switches are skipped. When switching returns to the same band, it becomes the frequency when seek started.
M1 (TP1) to **M6**	The preset memory contents of the pressed key at the time the key was pressed are called without regard to the state of the M2S switch.
VF	Seek operation stops and the key operation is performed.
PSCAN AMEMO	Seek operation stops and preset scanning is performed.
LOCD **LOC (TP4)** **MONO (TP5)**	The operation of the pressed key is performed. The seek operation continues.

Symbol	Function
SCAN UP SCAN DWN	Auto tuning (scan operation) key. The frequencies are searched up (SCAN UP key) or down (SCAN DWN key) in 1 channel steps and whether or not there is a broadcast station (IF count and SD signal) is detected at each receiving frequency and when a broadcast station is judged to be present, that frequency is held for 5 seconds. On the VF band, whether or not there is an SK signal is detected as well as seek operation. If no operation is performed during this 5 seconds, the seek operation is repeated and the next broadcast station is received sequentially every 5 seconds (scan operation). During this 5 seconds hold, the frequency display flashes at 1 Hz (duty 50 %). At the end of the 5 seconds hold, BEEP is output. Seek operations (channel up/down method, AUTOSTP switch and IF count, SD detection, SK signal detection) are the same as the SEEK UP and SEEK DWN keys. When the radio is turned off (including mode switching) and then turned on, the frequency held last (when there is not even 1 broadcast station, the frequency when the scan operation started) is received. The operation of each key during seek operation (other than at 5 seconds hold) is shown below.

Key	Operation
SCAN UP SCAN DWN	• SCAN UP key during scan up and SCAN DWN key during scan down Scanning stops and returns to the frequency held last. However, when the auto local function is used, the local mode is switched. • SCAN DWN key during scan up and SCAN UP key during scan down Operation shifts to operation of the pressed key from the frequency when the key was pressed. Key transfer operation is also enabled.
SEEK UP SEEK DWN	Scanning stops and seek operation starts from the frequency when the key was pressed.
MAN UP MAN DWN	Scanning stops and returns to the frequency held last (when a frequency was not held, returns to the frequency when scanning started). Scanning stops the moment the key is pressed even when the AUTO500 switch is 1 (when the MAN UP or MAN DWN key is pressed for more than 0.5 seconds, seek is performed).
BAND	Scanning stops and the band is switched sequentially as shown below. → FM1 → FM2 → FM3 → MW1 → MW2 → LW → However, bands disabled by receiving area and DISFM3, ENMW2, and DISLW switches are skipped. When switching returns to the same band, the frequency held last is received. When a frequency was not held, the frequency when scanning started is received.

Symbol	Function
SCAN UP SCAN DWN	

Key	Operation
M1 (TP1) to M6	When a key is pressed, scanning stops and the preset memory contents of the pressed key are called without regard to the state of the M2S switch.
VF	Scanning stops and operation of the key is performed.
PSCAN AMEMO	Scanning stops and preset scan is performed from M1.
LOUD LOC (TP4) MONO (TP5)	The operation of the pressed key is performed. Seek (scan operation) continues.

Momentary keys other than those described above are invalid. (However, the POWER key is valid.)

Operation of each key during 5-second hold is shown below.

Key	Operation
SCAN UP SCAN DWN	• SCAN UP key during scan up and SCAN DWN during scan down Scanning stops and the frequency being held is held. • SCAN DWN key during scan up and SCAN UP key during scan down And then the operation of the pressed key is performed.
SEEK UP SEEK DWN	Scanning stops and seek starts from the frequency being held.
MAN UP MAN DWN	Scanning stops and operation of the MAN UP or MAN DWN key is performed from the frequency being held.
BAND	Scanning stops and the band is switched sequentially as shown below. → FM1 → FM2 → FM3 → MW1 → MW2 → LW → However, bands disabled by receiving area and DISFM3, ENMW2, and DISLW switches are skipped. When switching returns to the same band, it returns to the held frequency.

Symbol	Function

Key

MEF

- When the M2S switch is 1, this key is invalid.
- When M2S switch = 0

  Each time the key is pressed, the memory write state is inverted as shown below.

(i)

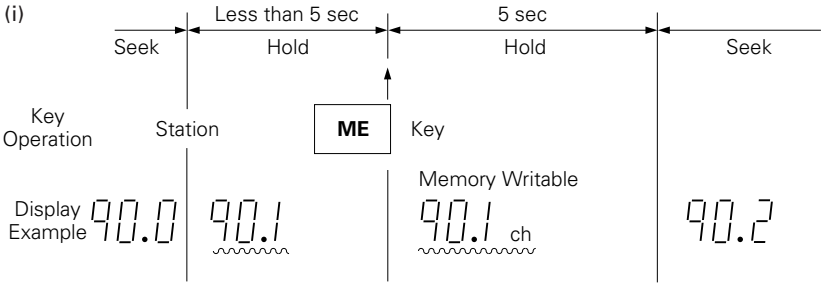

(ii)

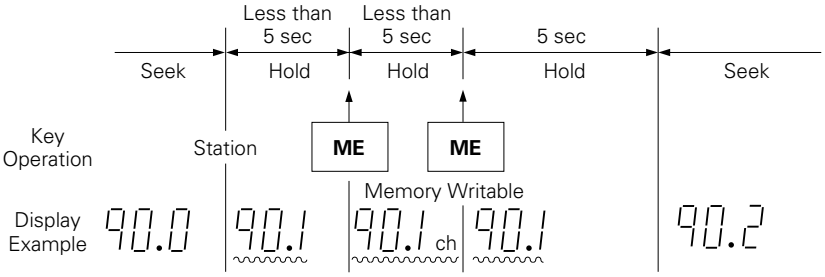

When a [M1 (TP1)] to [M6 (TP6)] key is pressed in the memory writable state, data is written to the present memory corresponding to the pressed key.

SCAN UP

SCAN DWN

Key	Operation
VF	Scanning is canceled and the key operation is performed.
PSCAN AMEMO	Scanning is canceled and the key operation is performed.
LOUD **LOC (TP4)** **MONO (TP5)**	The operation of the pressed key is performed. Scanning continues.

Symbol	Function

Key	Operation

SCAN UP
SCAN DWN

M1 (TP1)
M2 (TP2)
M3 (TP3)
M4
M5
M6

- When M2S switch = 0
  - Memory unwritable state

    The scanning operation is canceled and the preset memory contents corresponding to the pressed key is called.
  - Memory writable state (See the **ME** key below.)

    The held frequency is written to the preset memory corresponding to the pressed key and the memory writable state is canceled. Then, the hold state is held for 2 seconds. If an operations not performed during this time, the next station is searched.

(Example)

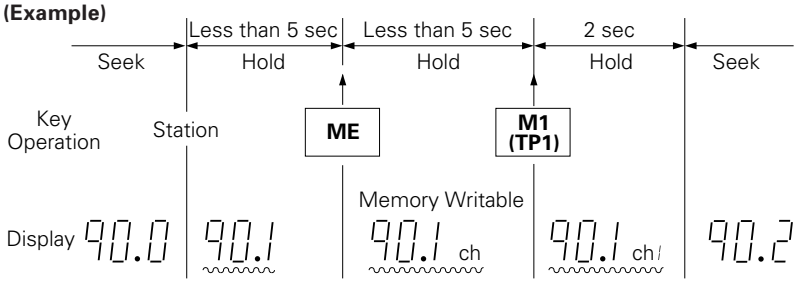

- When M2S switch = 1
  - When key released within 2 seconds

    The preset memory contents corresponding to the pressed key are called and the scan operation is reset the moment the key is released.

(Example)

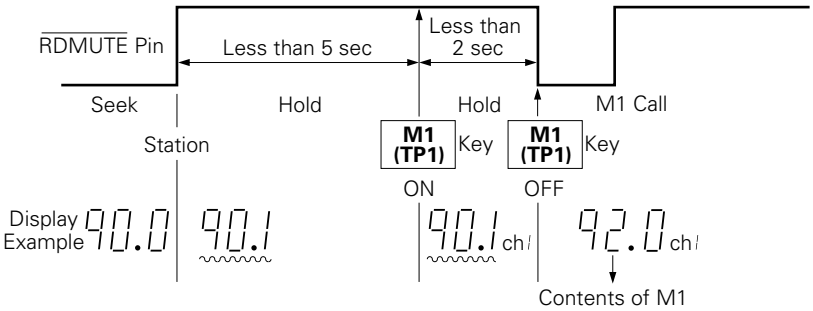

  - When key pressed for more than 2 seconds

    The held frequency is written to the preset memory corresponding to the pressed key 2 seconds after the key has been passed for 2 seconds. 2 seconds after the end of writing, hold ends and the next station is searched (seek operation).

(Example)

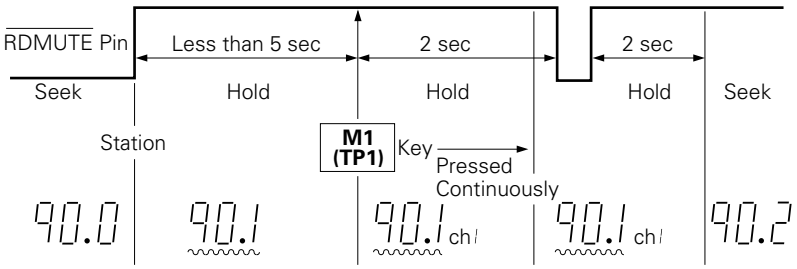

<table>
<tr><th>Symbol</th><th>Function</th></tr>
<tr><td>BAND</td><td>Receiving band selection switch.
It is valid only in the radio mode.
Each time this switch is pressed, the band is switched sequentially as shown below.
→ FM1 → FM2 → FM3 → MW1 → MW2 → LW
However, bands disabled by receiving area and DISFM3, ENMW2, and DISLW switches are skipped.
When the band is switched (FM1 → FM2 → FM3 → MW1 → MW2) in the same band (FM, MW), the band display and last channel change.
When the BAND key is pressed during VF band reception, the VF band is reset and the device returns to the band received last.</td></tr>
<tr><td>ME</td><td>In the radio mode, during frequency display, this key is used as the preset memory writable state setting key and during clock display (CE pin = High level), this key is used with the MAN UP and MAN DWN keys as the clock adjustment key.
When the ME2S = 0, this key operates as the preset memory writable state and clock adjustment key. When ME2S = 1, this key operates as the preset memory writable state and clock adjustment key. When ME2S = 0, use the DISP key to switch the display.
This key operation is described below.
• Radio mode frequency display
This key is used as the preset memory writable state setting key.
It is valid only when the initialize diode M2S switch is 0.
When this key is pressed, the device enters the preset memory writable state for 5 seconds from the moment the key was pressed and the current receiving frequency is written to the preset memory corresponding to the pressed key by pressing the M1 (TP1) to M6 key. If the ME key is pressed continuously at this time, the write operation is not performed.
During the preset memory writable state, the “ch” display flashes at 1 Hz (duty 50 %). If preset memory is being received, the preset memory number flashes also.
This key is invalid during the seek operation (including seek operation at scanning). However, it is valid at 5 seconds hold during the preset memory scan and scan operations.
Each key operation in the preset memory writable state is shown below.
<table>
<tr><th>Key</th><th>Operation</th></tr>
<tr><td>M1 (TP1)
to
M6</td><td>The frequency being received when a key is pressed is written to the preset memory corresponding to the pressed key.
Muting is not output.</td></tr>
</table></td></tr>
</table>

Symbol	Function
ME	

Key	Operation
VF PSCAN AMEMO SEEK UP SEEK DWN SCAN UP SCAN DWN MAN UP MAN DWN DISP	Preset memory write mode is reset and each key operation is performed.
BAND	The preset memory writable state is reset and the band is switched sequentially as shown below. → FM1 → FM2 → FM3 → MW1 → MW2 → LW However, bands disabled by receiving area and DISFM3, ENMW2, and DISLW switches are skipped.
ME	The preset memory writable state is reset.
LOUD LOC (TP4) MONO (TP5)	The preset memory writable state is held and each key operation is performed.

Keys other than those described above (except the POWER key) are invalid.

When the radio is turned off and then turned back on (including tape and CD mode switching) in the preset memory writable state, the writable state is released.

- Clock display

  This key is used as the time adjustment key.

  The minute and hour digits are adjusted as shown below by pressing the MAN UP and MAN DWN keys while pressing the ME key.

  - Hour adjustment

    The hour is advanced one hour each time the MAN DWN key is pressed. When the key is held down for more than 0.5 seconds, the hour changes continuously at a speed of 4 hours/sec (1 hour in 250 ms) until the key is released.

    The minute digit and seconds count are not affected.

  - Minute digit adjustment

    The minute digit is advanced one minute each time the MAN UP key is pressed. When the key held down for more than 0.5 seconds, the minute digit changes at a speed of 8 minutes/sec (1 minute in 125 ms) until the key is released. Carry to the hour digit is not performed. Each time the minute digit is adjusted, the seconds count is reset.

Symbol	Function
MAN UP MAN DWN	In the radio mode, these keys are used as the receiving frequency up/down keys. During clock display, these keys are used with the **ME** key as the clock adjustment keys. Their operation is shown below. • Radio mode These keys operate as shown below, depending on the setting of the initialize diode matrix AUTO500 switch. • Operation by AUTO500 switch

AUTO500	Description
0	Each time a key is pressed, the frequency is incremented (**MAN UP** key) or decremented (**MAN DWN** key) one step (1 channel space). When the key is held down for approx. 0.5 seconds, the frequency changes continuously at a speed of approx. 50 ms per step until the key is released. **Example 1)** When key released within 0.5 seconds 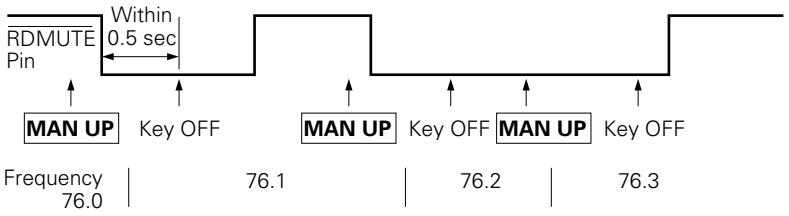 **Example 2)** When key held down for more than 0.5 seconds 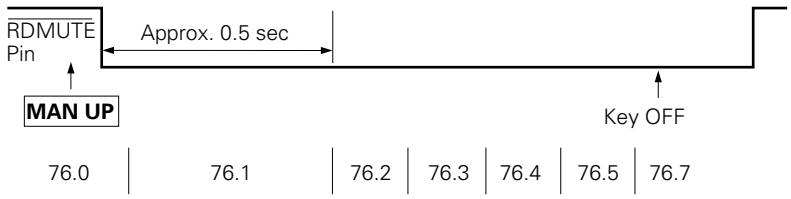

Symbol	Function
MAN UP **MAN DWN**	

AUTO500	Description
1	Each time a key is pressed, the frequency is incremented (**MAN UP** key) or decremented (**MAN DWN** key) one step. When the key is held down for more than 0.5 seconds, the seek operation (seek up for **MAN UP** and seek down for **MAN DWN**) starts at the point after 0.5 seconds. This seek operation is the same as that of the **SEEK UP** and **SEEK DWN** keys. After the key was held down for more than 0.5 seconds, the seek operation continues even if the key is released. **Example 1)** When key released within 0.5 seconds 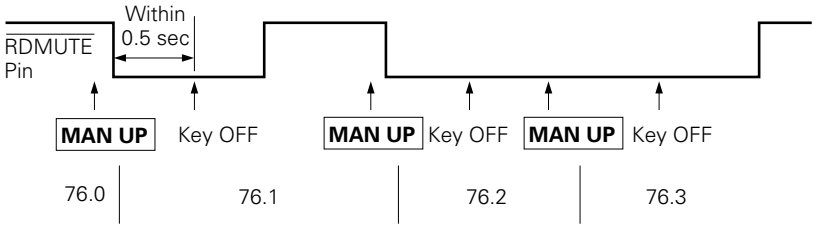 **Example 2)** When key held down for more than 0.5 seconds 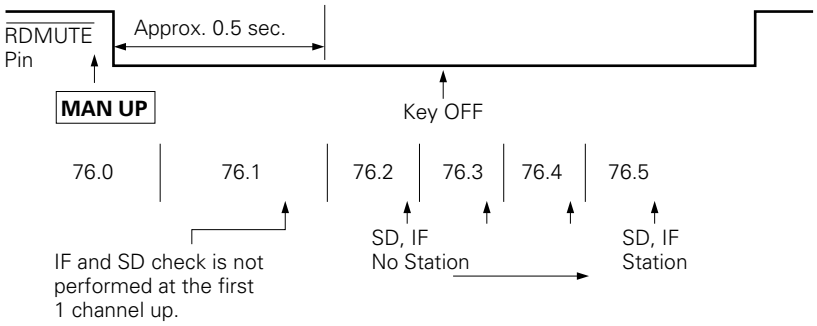 When the AUTO500 switch was set to 1, do not use the **SEEK UP** and **SEEK DWN** keys.

- **During clock display**

  When the clock is displayed and the **ME** key was pressed and held, the minute and hour digits are adjusted by pressing the **MAN UP** and **MAN DWN** keys. For a description of the minute and hour digits adjustment method, see the **ME** key above.

LOUD	LOUD (LOUDNESS) control key. It is valid in the radio, tape, and CD modes. Each time this key is pressed, the LCD panel “LOUD” display and the LOUD pin (pin 19) output are inverted. The LOUD state is held even when radio, tape, and CD mode switching is performed. When the power is turned on, the OFF state is set (“LOUD” display OFF, LOUD pin LOW level).

Symbol	Function
LOC (TP4)	In the radio mode, this key is used as the LOCAL (LOCAL/DX) control key. In the tape mode, this key is used as the tape function key by initialize diode. • Radio mode This key is valid only when initialize diode AUTOLOC switch = 0. Each time this key is pressed, the LCD panel "LOC" display and the LOC pin (pin 10) output are inverted. High level is output from the LOC pin while "LOC" is displayed. The FM, MW, and LW bands common VF band is the same as the FM band. When the power is turned on, the OFF state ("LOC" display off, LOC pin low level) is set. • Tape mode When the initialize diode ENTPK switch is 1, this key is used as the AMS, NR (NOISE REDUCTION), or MTL (METAL) function key. For whether the AMS, NR, or MTL function is selected, see the initialize diode KAMS, KNR and KMTL switches above. When the AMS, MTL, or NR function key is selected, operation is the same as the AMS, MTL, and NR keys. See the description of each key.
MONO (TP5)	In the radio mode, this key is used as the MONO (MONORAL) control key. In the tape mode, this key is used as the tape function key by initialize diode. • Radio mode This key is valid only in FM and VF bands. Each time this key is pressed, the LCD panel "MONO" display and the MONO/NR_2 pin (pin 18) output the inverted. High level is output from the MONO/NR_2 pin while "MONO" is displayed. When the power is turned on, the OFF state is set ("MONO" display OFF, MONO/NR_2 pin Low level). • Tape mode This key can be used as the AMS, MTL, or NR function key by initialize diode ENTPK, KAMS, KNR, and KMTL switches. See the ENTPK, KAMS, and KMTL switches items. When the AMS or MTL function is selected, this key operates the same as the MTL, AMS or NR key. See the description of each key. In the radio monitor and DK ON modes, this key operates as the MONO control key.
MTL	MTL (METAL) control key. This key is valid in the tape mode. Each time this key is pressed, the LCD panel "MTL" display and the MTL pin (pin 21) output are inverted. High level is output from the LOC/MTL pin while "MTL" is displayed. When the power is turned on, the OFF state is set ("MTL" display OFF, MTL pin Low level).

<table>
<tr><th>Symbol</th><th>Function</th></tr>
<tr><td>NR</td><td>
NR1 (NOISE REDUCTION) and NR2 control key.
This key is valid in the tape mode.
Its operations depends on the setting of the initialize diode ENNR2 switch as shown below.
<table>
<tr><th>ENNR2</th><th>Key Operation</th></tr>
<tr><td>0</td><td>Each time this key is pressed, the LCD panel “NR1” display and the NR1 pin (pin 22) output are inverted.
High level is output from the NR1 pin while “NR1” is displayed.
When the power is turned on, the OFF state is set (“NR1” display OFF, NR1 pin Low level).</td></tr>
<tr><td>1</td><td>Each time this key is pressed, the display and output are switched as shown below.
“NR1” display OFF
NR1 pin Low
“NR2” display OFF
MONO/NR2 pin Low
→
“NR1” display ON
NR1 pin High
“NR2” display OFF
MONO/NR2 pin Low
→
“NR1” display ON
NR1 pin Low
“NR2” display ON
MONO/NR2 pin High
→
When the power is turned on, NR1 and NR2 are both turned off.</td></tr>
</table>
</td></tr>
<tr><td>AMS</td><td>
AMS (AUTO MUSIC SEARCH) control key.
This key is valid in the tape mode.
Each time this key is pressed, the LCD panel “AMS” display and the AMS pin (pin 20) output are inverted. High level is output from the AMS pin while “AMS” is displayed.
When the AMS pin is High level (AMS mode), if the TPSET switch is ON, the AMS pin holds the High level output even if the mode is switched to the CD or radio mode.
When the power is turned on, AMS is turned off (“AMS” display OFF, AMS pin Low level).
</td></tr>
<tr><td>RDMONI</td><td>
Radio monitor key.
This key is valid in the tape and CD modes.
Each time this key is pressed, the radio monitor mode is inverted. In the radio monitor mode, the LCD panel “RDMONI” display lights.
In the radio monitor mode, all band tuning operations are possible and radio muting ($\overline{\text{RDMUTE}}$ pin) is turned off and audio muting ($\overline{\text{AMUTE}}$ pin) is turned on.
</td></tr>
</table>

Symbol	Function
DISP	Display switching key. This key is valid when initialize diode NOCLK = 0 (clock), ME2S = 0. The display switching operation is shown below. • Radio mode Each time this key is pressed, the frequency display and clock display are switched. This key is invalid at seek scan and auto preset scan. Operation according to the setting of the initialize diode PRIO1 and PRIO2 switches is shown below.

PRIO1	PRIO2	Priority Display	Description
0	0	None	Each time the **DISP** key is pressed, the frequency display and clock display are switched.
0	1	Frequency display	When the **DISP** key is pressed during frequency display, the clock is displayed for 5 seconds. When the **DISP** key is pressed during the 5 seconds clock display, the display returns to the frequency display.
1	0	Clock display	When the **DISP** key is pressed during clock display, the frequency display is displayed for 5 seconds. When the **DISP** key is pressed during the 5 seconds frequency display, the display returns to the clock display.

When the device is switched to the radio mode, display starts from frequency display.

• Tape mode

The **DISP** key is invalid.

• CD mode

Each time this key is pressed, the "$\overline{1}_\overline{0}$" display and clock display are switched.

Operation according to the setting of the initialize diodes PRIO1 and PRIO2 is shown below.

PRIO1	PRIO2	Priority Display	Description
0	0	None	Each time the **DISP** key is pressed, the "$\overline{1}_\overline{0}$" display and clock display are switched.
0	1	"$\overline{1}_\overline{0}$" display	When the **DISP** key is pressed, during "$\overline{1}_\overline{0}$" display, the clock is displayed for 5 seconds. When the **DISP** key is pressed during the 5 seconds clock display, the display returns to "$\overline{1}_\overline{0}$" display.
1	0	Clock	When the **DISP** key is pressed during clock display, the "$\overline{1}_\overline{0}$" display is displayed for 5 seconds. When the **DISP** key is pressed during the 5 seconds "$\overline{1}_\overline{0}$" display, the display returns to the "$\overline{1}_\overline{0}$" display.

When the device is switched to the CD mode, display starts from "$\overline{1}_\overline{0}$" display.

Symbol	Function
POWER	This key is used when turning the radio ON and OFF momentary key, controlling the illumination, etc. This key is valid only when the CE pin is High. The POWER pin (pin 23) output is inverted by pressing this key. When using this key, set the RDON switch (diode matrix) to 0. The radio is turned on and off by turning the transistor switch RDON ON and OFF with the output of the POWER pin. For details, see **2 "Mode Transition"** and **6 "Application Circuits"**.

2. MODE TRANSITION

With the μPD1723GF-013 and μPD1723GF-213, the radio can be turned on and off by the following two methods:

(i) By CE pin when initialize diode switch RDON = 1

(ii) By turning the transistor or alternate switch RDSET on and off

The mode transition at each operation is described in **2.1, 2.2,** and **2.3.**

2.1 WHEN INITIALIZE DIODE RDON = 1 (RADIO ON/OFF BY CE PIN)

The radio mode is turned on and off by CE pin.

Switching to the tape and CD modes is performed by TPSET and CDSET switches, respectively.

When RDON = 1, do not use the RDSET switch.

When the CE pin is made Low level, clock display is not performed.

(1) When CE pin changed Low to High

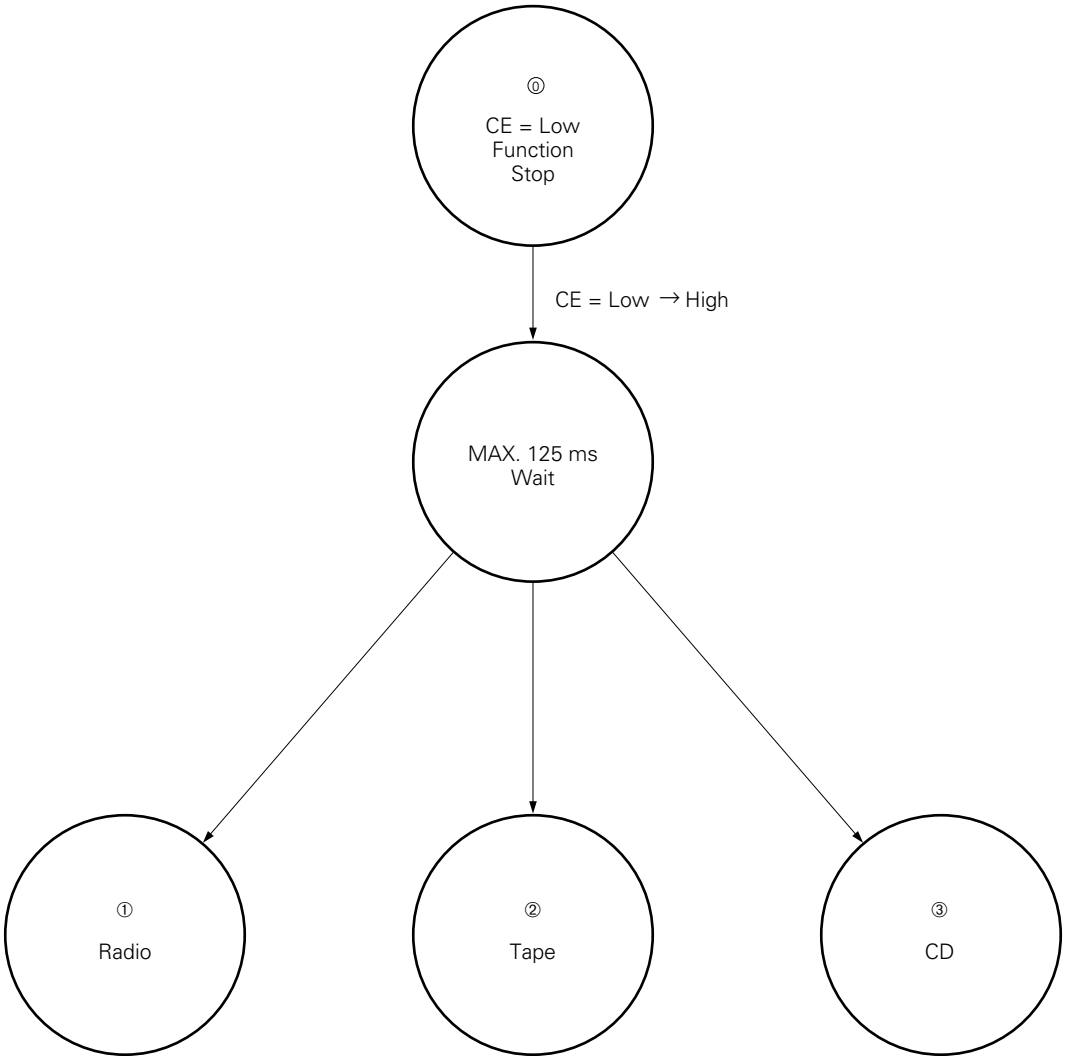

(2) When CE pin High level

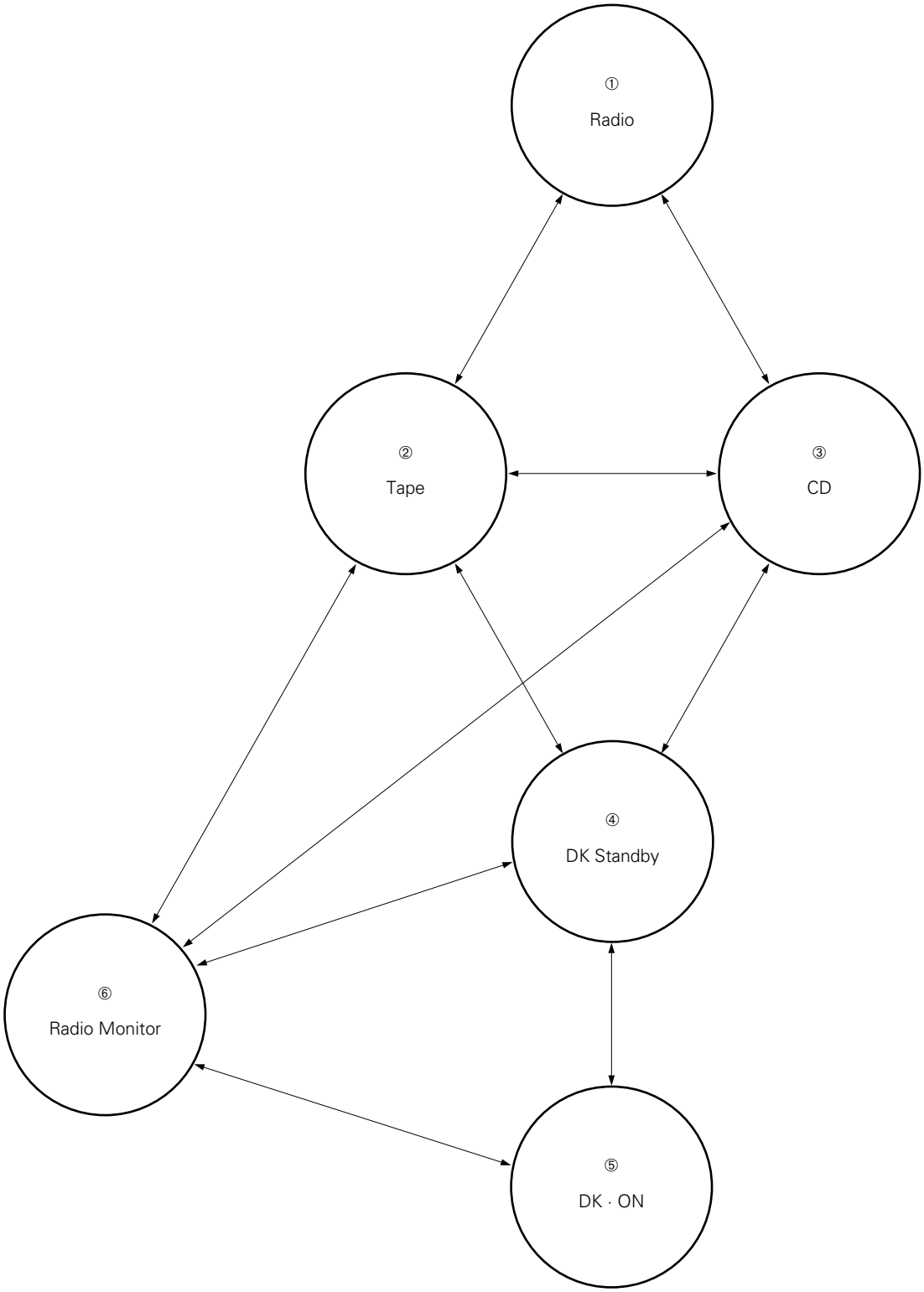

2.2 RADIO ON/OFF BY RDSET SWITCH

The radio mode is turned on and off by RDSET switch.

Switching to the tape and CD mode is performed by TPSET and CDSET switch, respectively.

The difference from RDON = 1 of 3.1 is that the clock is displayed even when the radio, tape, and CD modes are OFF.

(1) When CE pin changed Low to High

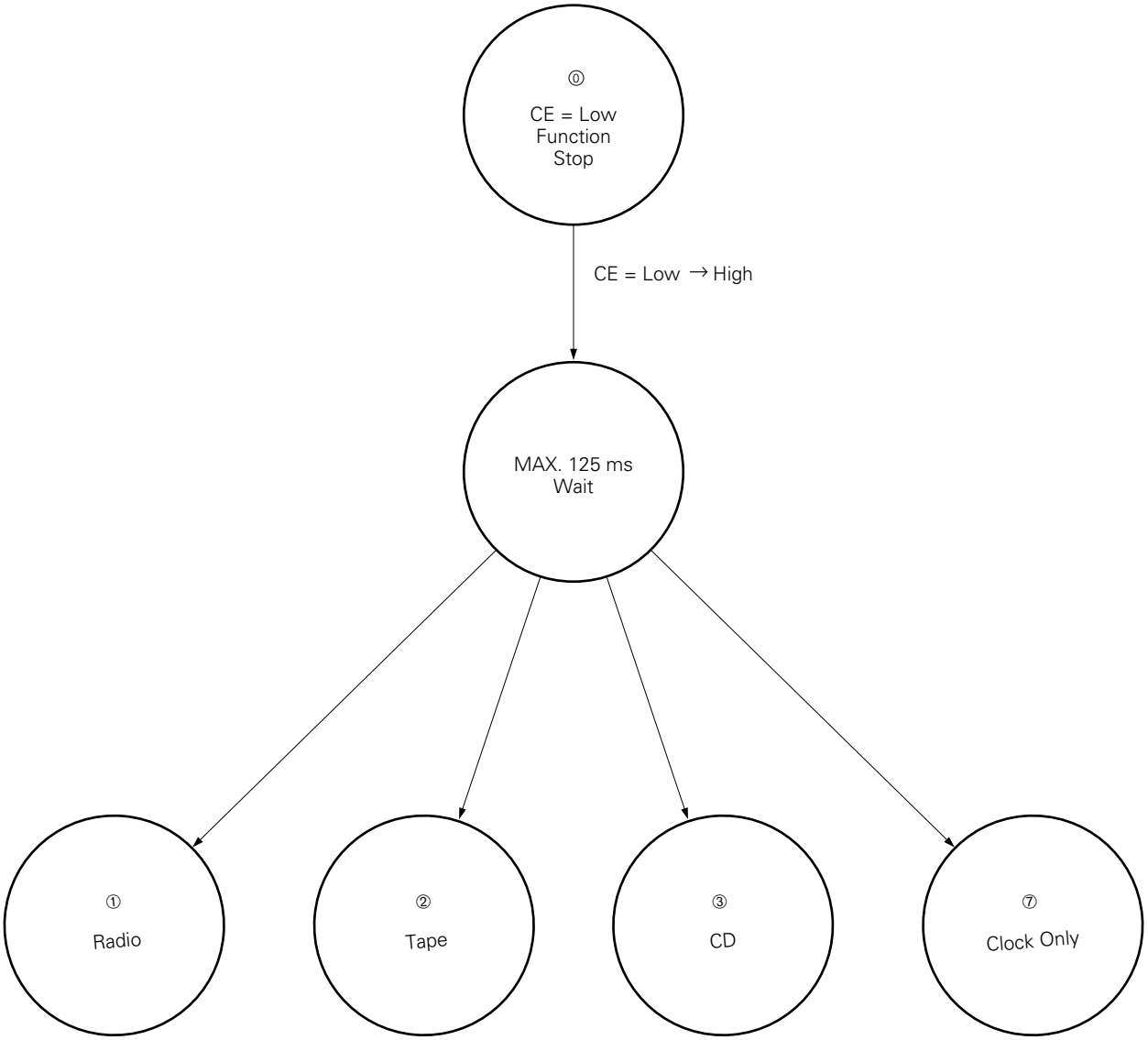

(2) When CE pin High level

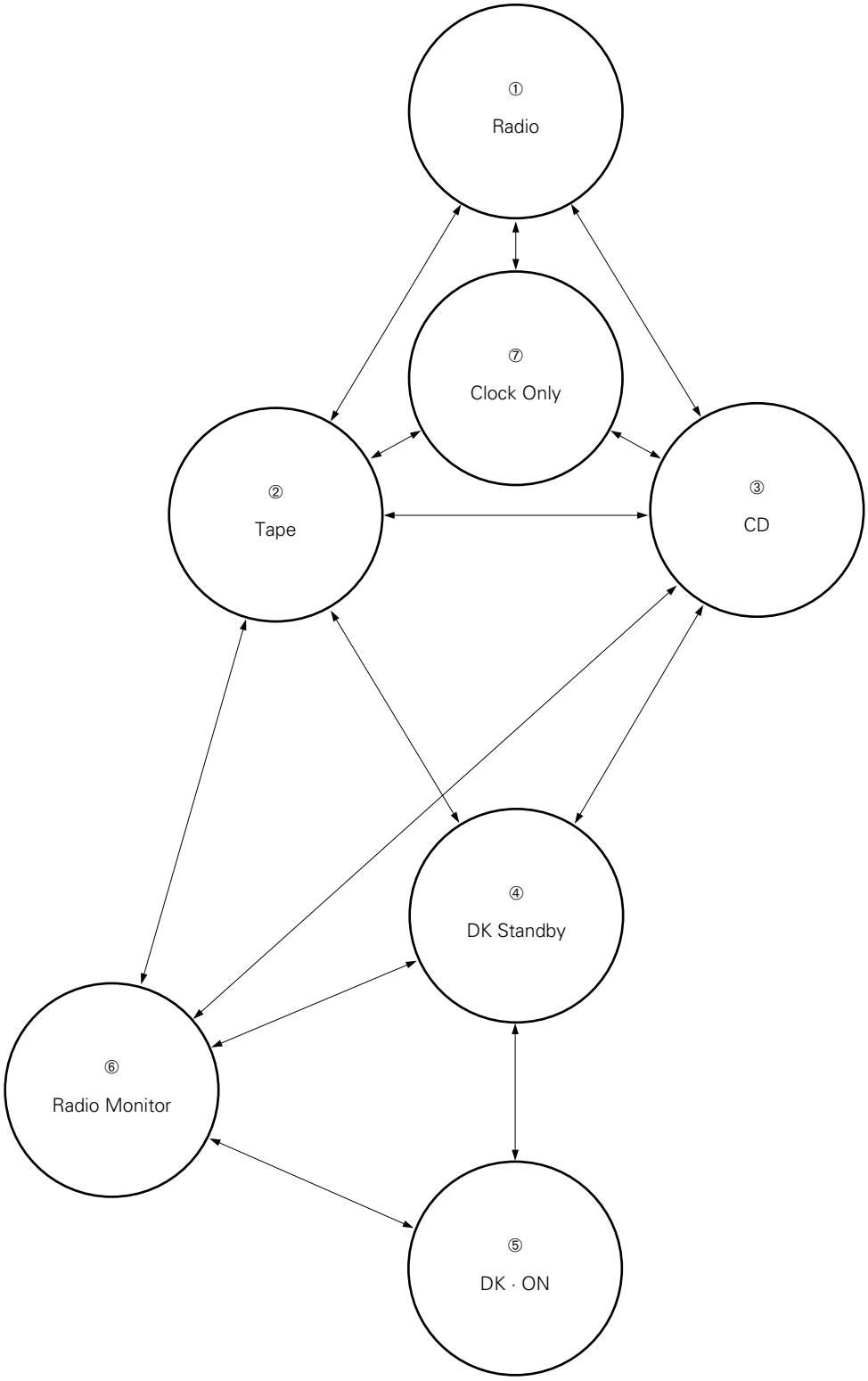

2.3 DESCRIPTION OF EACH MODE

Mode	Description
⓪ CE = Low	Backup mode. When the NOCLK switch is set to no-clock, low consumption current (400 nA max.) backup is possible. When clock is selected, the device is set to the clock count mode. In the clock mode, the maximum consumption current is 500 μA.
① Radio	When the CE pin is High level and the TPSET and CDSET switches are OFF, the device is set to the radio mode.
② Tape	When the CE pin is High level and the TPSET switch is ON and the CDSET switch is OFF, the device is set to the tape mode.
③ CD	When the CE pin is High level and the CESET switch is ON, the device is set to the CD mode.
④ DK standby	When the VF band is received in the radio mode and the mode is switched to the tape or CD mode by TPSET or CDSET switch, the device is set to the DK standby mode. The device is also set to the DK standby mode by pressing the **VF** key in the tape or CD modes. In the DK standby mode, VF band tuning operation is enabled.
⑤ D • K	When the DK switch is set to ON in the DK standby mode, the device enters the DK• ON mode. In the DK • ON mode, radio muting ($\overline{\text{RDMUTE}}$ pin) is turned off and audio muting ($\overline{\text{AMUTE}}$ pin) is turned on.
⑥ Radio monitor	When the tape mode is set by TPSET switch when the radio monitor mode is ON by **RDMONI** in the radio mode, the device enters the radio monitor mode. The radio monitor mode is also set by pressing the **RDMONI** key in the tape and CD modes. In the radio monitor mode, normal tuning operation is possible. In the radio monitor mode, radio muting ($\overline{\text{RDMUTE}}$ pin) is turned off and audio muting ($\overline{\text{AMUTE}}$ pin) is turned on.
⑦ Clock	NOCLK = 0 Only clock display is performed. Clock adjustment is also possible. NOCLK = 1 Function is disabled. However, since the CE pin is High level, the consumption current is 500 μA TYP.

2.4 RADIO ON/OFF BY POWER KEY

The POWER key is invalid when the CE pin is High level.

Each time the key is pressed, the POWER pin (pin 23) output is inverted.

Therefore, a circuit is configured so that the radio is turned on and off by setting RDON = 0 and turning the RDSET switch on and off by POWER pin.

For details, see **6 "Application Circuits"**.

3. DISPLAY

3.1 LCD PANEL

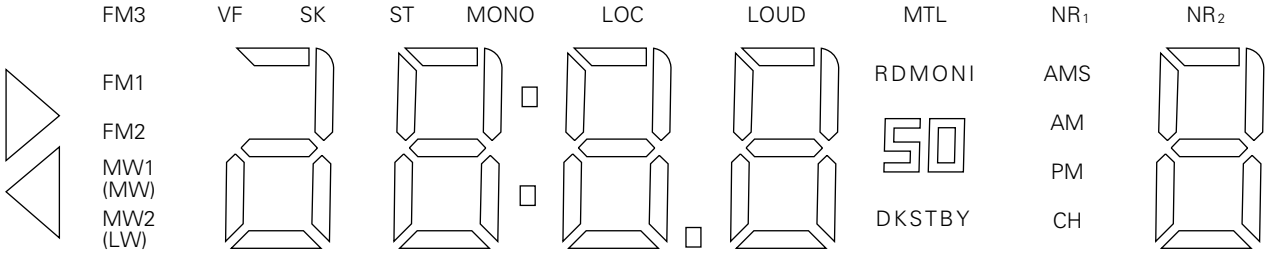

3.2 FONT

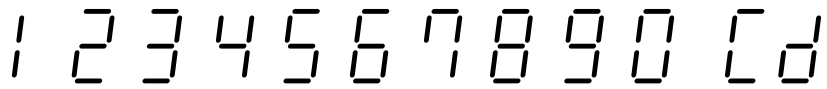

3.3 SEGMENT LINES

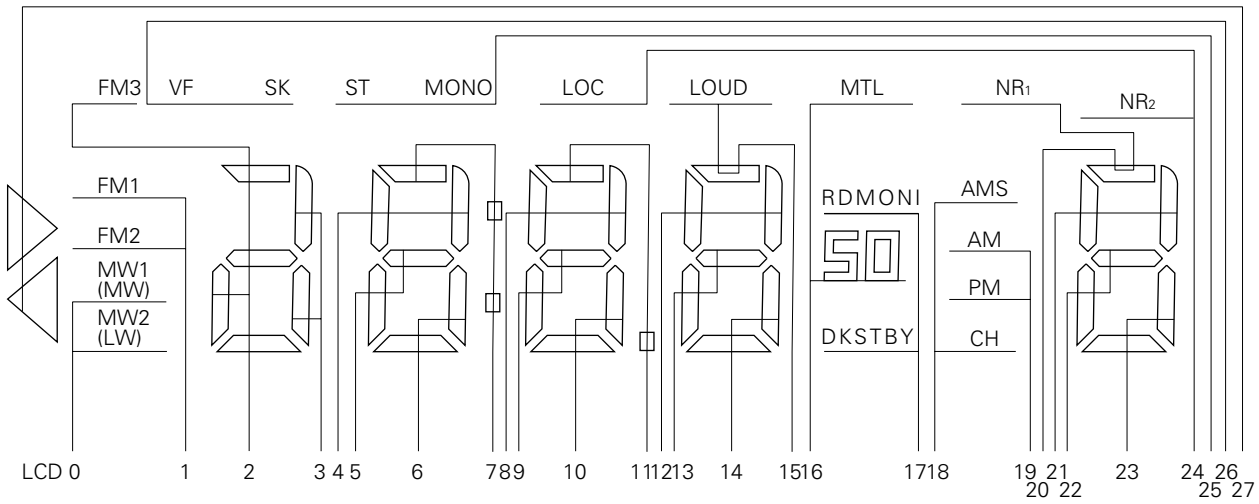

3.4 COMMON LINES

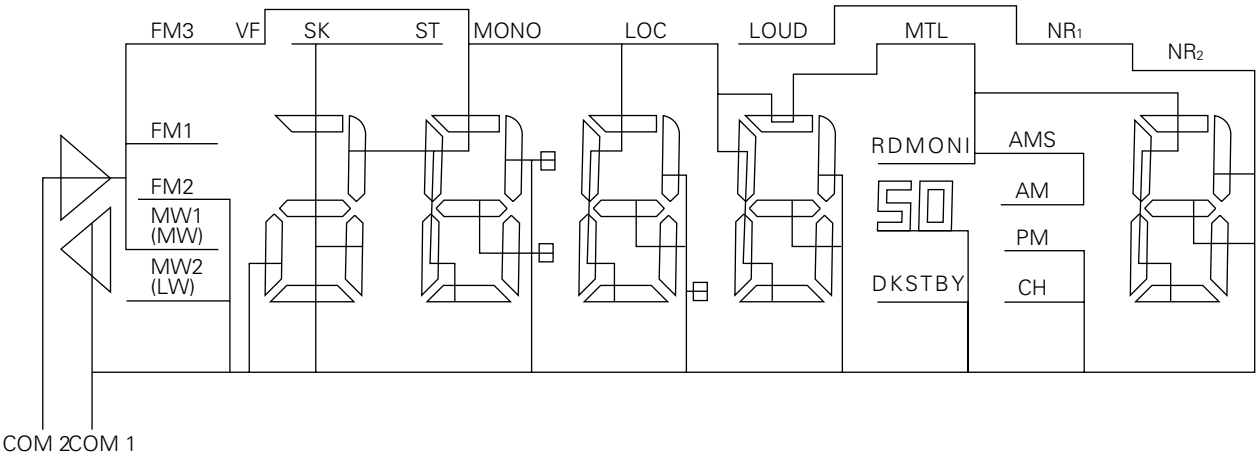

3.5 LCD ASSIGNMENT TABLE

LCD	COM1	COM2
0	MW2 (LW)	MW1 (MW)
1	FM2	FM1
2	4a, 4d, 4e, 4g	FM3
3	4c	4b
4	3b	3f
5	3g	3e
6	3c	3d
7	COLON (:)	3a
8	2b	2f
9	2g	2e
10	2c	2d
11	DPFM (.)	2a
12	1b	1f
13	1g	1e
14	1c	1d
15	LOUD	1a
16	50	MTL
17	DKSTBY	RDMONI
18	CH	AMS
19	PM	AM
20	NR_1	Ca
21	Cb	Cf
22	Cg	Ce
23	Cc	Cd
24	NR_2	LOC
25	ST	MONO
26	SK	VF
27	◁	▷

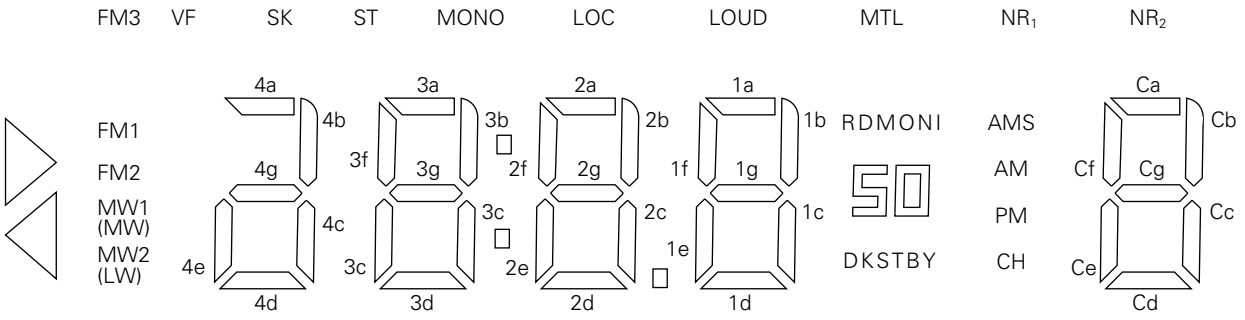

3.6 DESCRIPTION OF DISPLAYS

Display	Description
VF	Indicates that the device is on the VF band.
SK	Indicates that the SK signal is input. It lights when the SK switch is turned on at the FM and VF bands.
ST	Indicates that a STEREO signal is input. It lights when the $\overline{ST}$ pin (pin 64) becomes Low on the FM and VF bands. However, it does not light in the MONO mode.
MONO	Indicates that the device is in the MONORAL mode. When the **MONO** key is pressed on the FM and VF bands, the display is inverted. High level is output from the MONO/NR_2 pin (pin 18) while this display is lit. It is invalid on the MW and LW bands.
LOC	Indicates that the device is in the LOCAL mode. When AUTOLOC = 0, when the **LOC** key is pressed in a radio mode (FM, MW, LW bands), the display is inverted. When AUTOLOC = 1, this display lights during autotuning local search. High level is output from the LOC pin (pin 10) during autotuning while this display is lit.
LOUD	Indicates that the device is in the LOUDNESS state. When the **LOUD** key is pressed in the radio, tape, or CD mode, this display is inverted. High level is output from the LOUD pin (pin 19) while this display is lit.
MTL	Indicates that the device is in the METAL state. When the **METAL** function key is pressed in the tape mode, this display is inverted. High level is output from the MTL pin (pin 21) while this display is lit.
NR_1	Indicates that the device is in the NR_1 (Noise Reduction) state. When the device is placed into the NR_1 state by **NR** function key in the tape mode, this display lights. High level is output from the NR_1 pin (pin 22) while this display is lit.
NR_2	Indicates that the device is in the NR_2 (Noise Reduction) state. The NR_2 function can be used with the initialize diode $ENNR_2$ switch. When the device was placed into the NR_2 state by **NR** function key in the tape mode, this display lights. High level is output from the MONO/NR_2 pin (pin 18) while this display is lit.
DKSTBY	Lights in the DK standby and DK ON modes in the tape/CD mode.
◁ ▷	Indicates the direction of tape travel. In the tape mode, this display indicates the tape direction according to the state of the RL switch. If the FF switch is ON, this display flashes. For more information, see the description of each pin.

Display	Description
FM1 FM2 FM3 MW1 (MW) MW2 (LW)	Indicates the receiving band in the radio mode. In Europe, when the device is switched to LW band, “MW2 (LW)” lights.
50	Displays the receiving frequency, CD, and clock. • Receiving frequency display Displayed in the radio mode. “50” is displayed only on the Europe and South Africa FM bands. “ . ” (D.P) is displayed as the decimal point on the FM bands. • CD display When the device enters the CD mode, the following is displayed. • Clock display 12 hour clock or 24 hour clock can be selected by initialize diode CLKDSP switch. Flashing of the “ : ” (colon) display is possible by initialize diode FLASH switch.
AMS	Indicates that the device is in the AMS (Auto Music Search) state. When the AMS function key is pressed in the tape mode, this display is inverted. High level is output from the AMS pin (pin 20) while this display is lit.
AM PM	12 hour clock AM and PM display.
ch	Indicates the preset memory number and AMS selection number. • Preset memory number display In the radio mode, when preset memory write and call are performed, the corresponding preset memory number and “ch” are displayed. In the memory write mode set by ME key, the “ch” display flashes at 1 Hz. During preset memory scanning by PSCAN key, the preset memory number display (Ca to Cg) flashes at 1 Hz.
RDMONI	Lights in the radio monitor mode.

4. RADIO MUTE OUTPUT TIMING (RDMUTE)

① Key ON chattering prevention
② Premuting and BEEP output
③ Division ratio setting and display contents updating
④ Postmuting
⑤ Scan time
⑥ PLL lock wait time

4.1 RADIO MUTE ($\overline{\text{RDMUTE}}$ PIN) OUTPUT TIMING CHARTS

(1) Manual up/down

(i) 1 channel up/down

(a) AUTO500 switch = 0

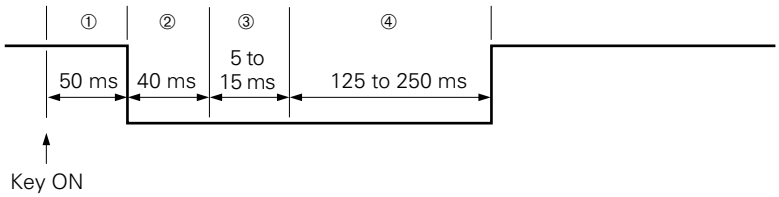

(b) AUTO500 switch = 1

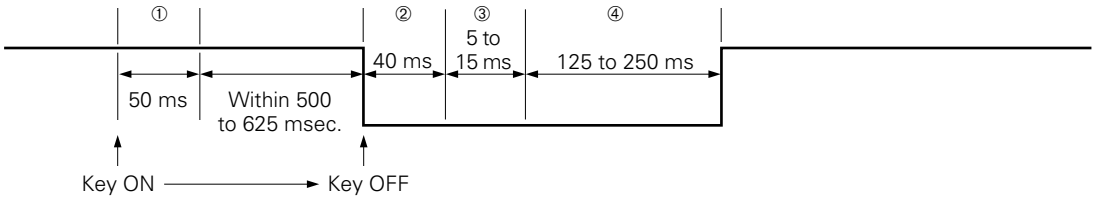

At the band edge (between lowest frequency and highest frequency) of both (a) and (b), time ④ is 625 to 750 ms.

(ii) Continuous up/down

(a) AUTO500 switch = 0

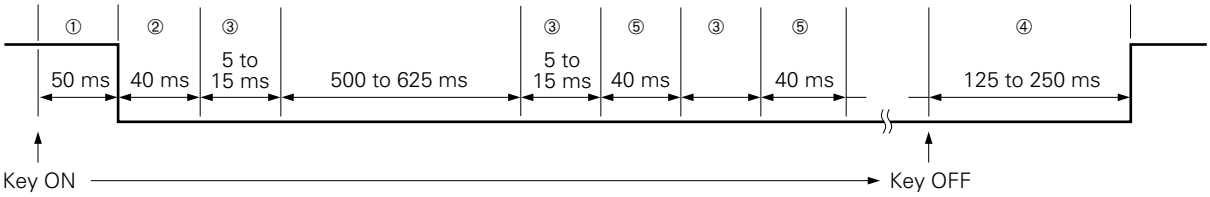

At the band edge, time ⑤ becomes 540 to 665 ms and time ④ becomes 625 to 750 ms.

(b) When AUTO500 switch = 1, continuous up/down is not performed because holding down the key for more than 0.5 seconds sets autotuning.

(2) Auto up/down

(i) **SEEK UP** , **SEEK DWN** , **SCAN UP** , **SEEK DWN** keys

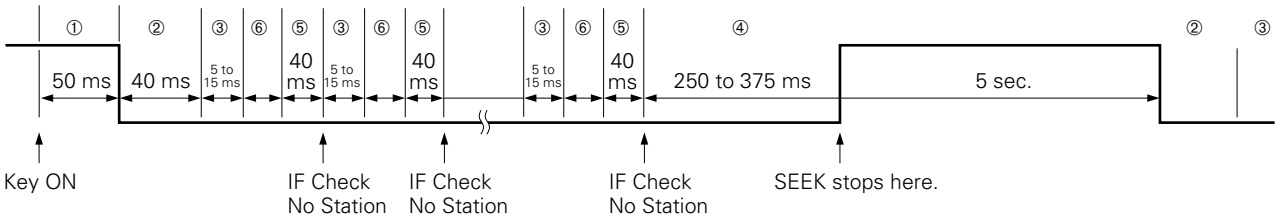

(ii) **MAN UP** or **MAN DWN** key held down for more than 0.5 seconds when AUTO500 switch = 1

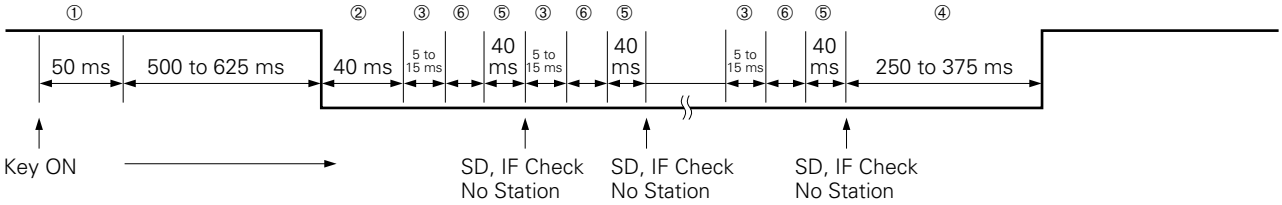

At both (i) and (ii), at the band edge time ⑤ becomes 520 to 695 ms.
IF check is performed twice, once in the FAST mode and once in the SLOW mode.
FAST mode IF check takes approx. 6 ms on the FM, MW, and LW bands and SLOW mode IF check takes approx. 15 ms on the FM band and approx. 25 ms on the MW and LW bands.

(3) Preset memory call

(i) M2S switch = 0

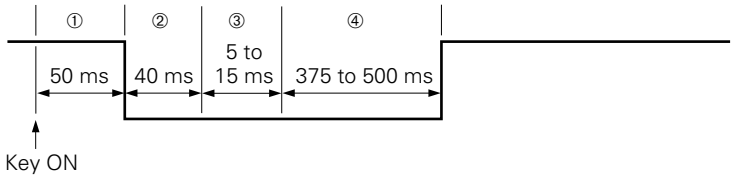

(ii) M2S switch =1

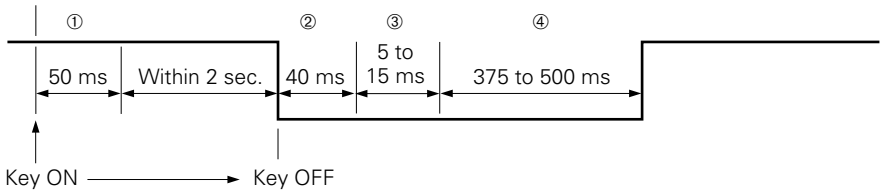

(4) Preset memory write

(i) M2S switch = 0

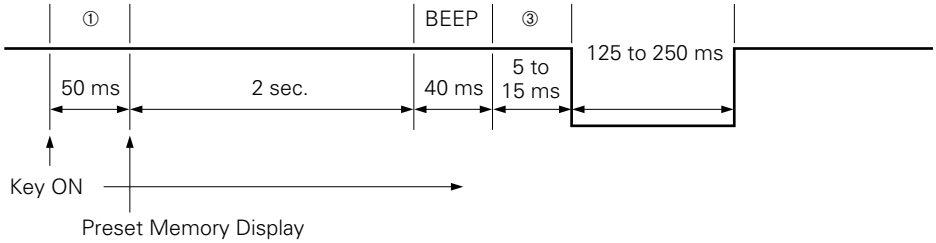

(ii) When M2S switch = 1, muting is not output.

(5) Preset memory scan

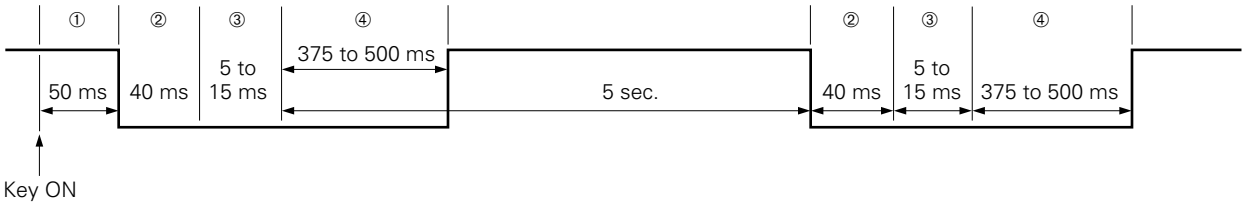

(6) VF mode

(i) When **VF** mode selected with VF key ON

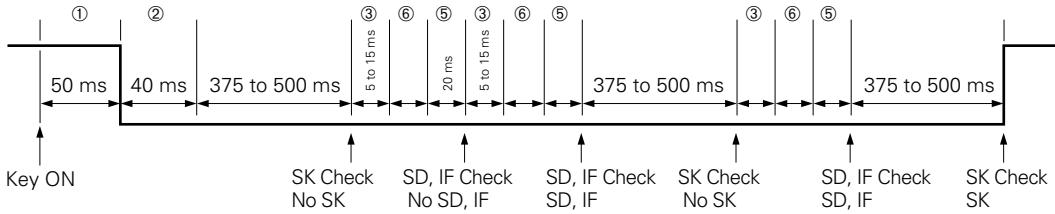

(ii) Seek and scan operation in VF mode

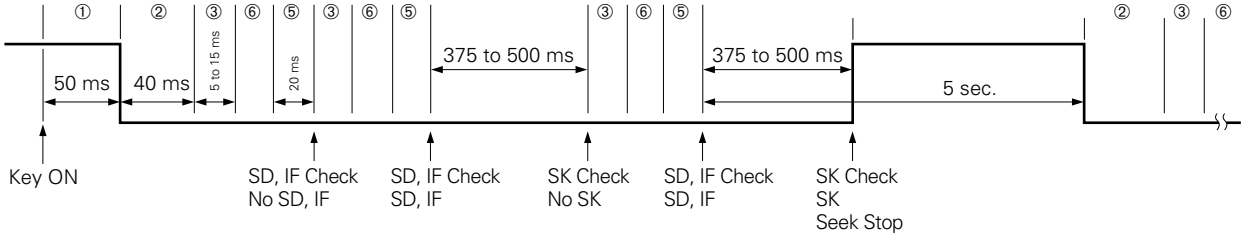

(7) Band switching

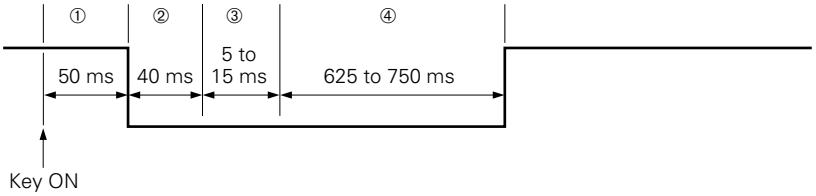

(8) Radio OFF to ON

(i) RDSET switch

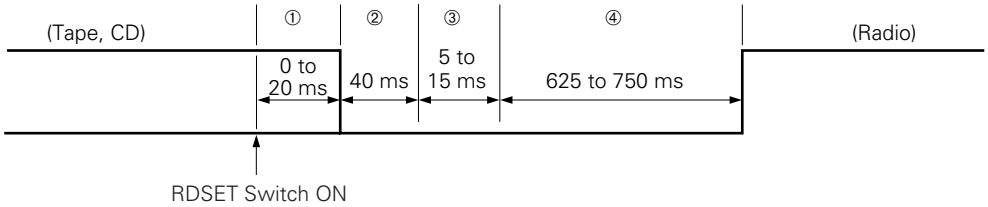

(ii) CE LOW to HIGH by RDON switch = 1

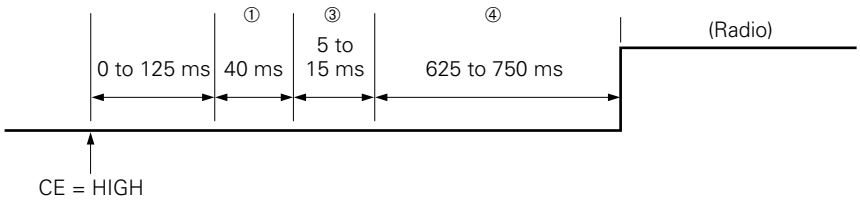

(9) Tape or CD OFF to ON

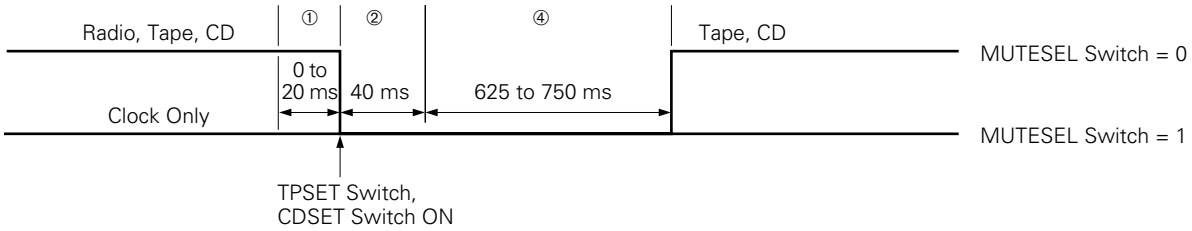

(10) CE pin High to Low

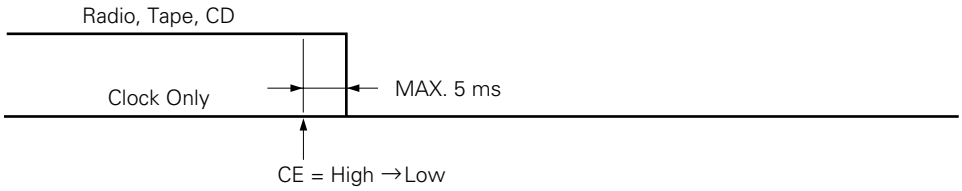

4.2 RADIO MUTE ($\overline{\text{RDMUTE}}$ PIN) AND AUDIO MUTE ($\overline{\text{AMUTE}}$ PIN) OUTPUT TIMING CHARTS

(1) When switched from radio mode to tape or CD mode

(Other than VF band, other than radio monitor mode)

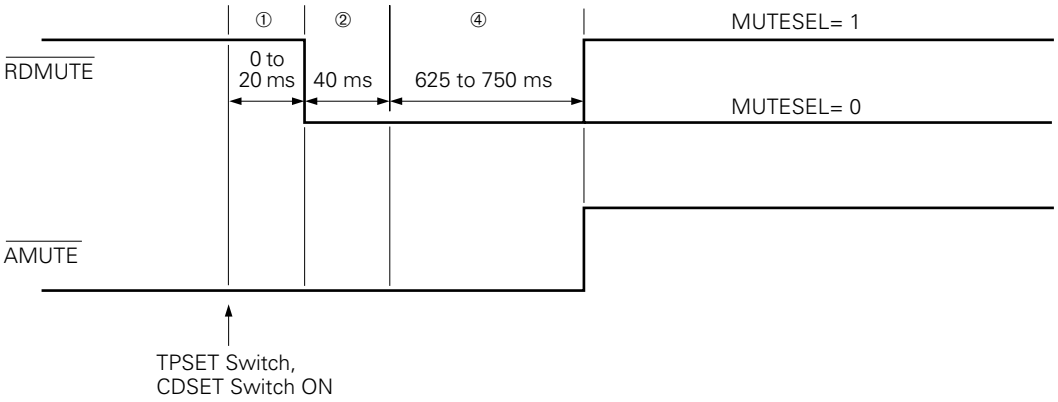

(2) When switched from VF band to tape or CD mode (Set MUTESEL to 0.)

i) When switched when DK = OFF

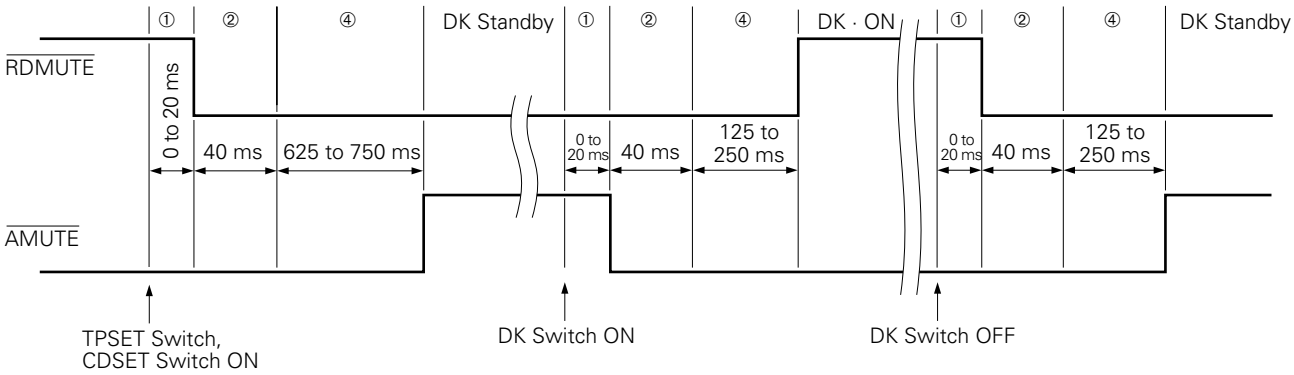

ii) When switched when DK = ON

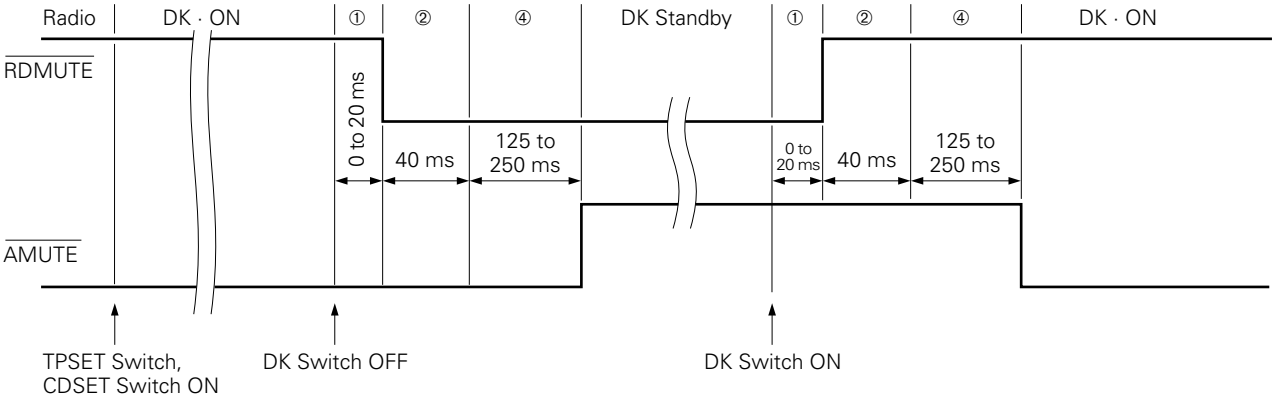

(3) Radio monitor mode (Set MUTESEL to 0.)

i) When switched from radio monitor OFF in radio mode

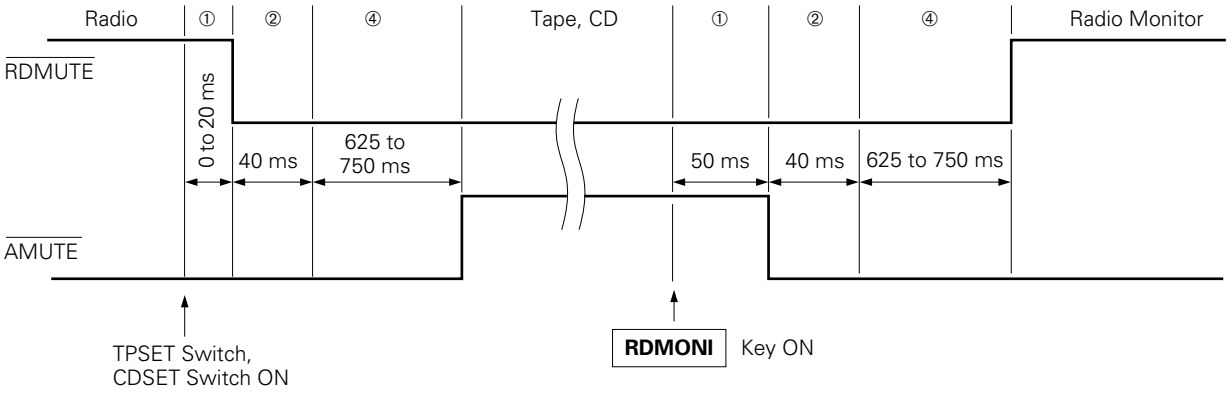

ii) When switched from radio monitor ON in radio mode

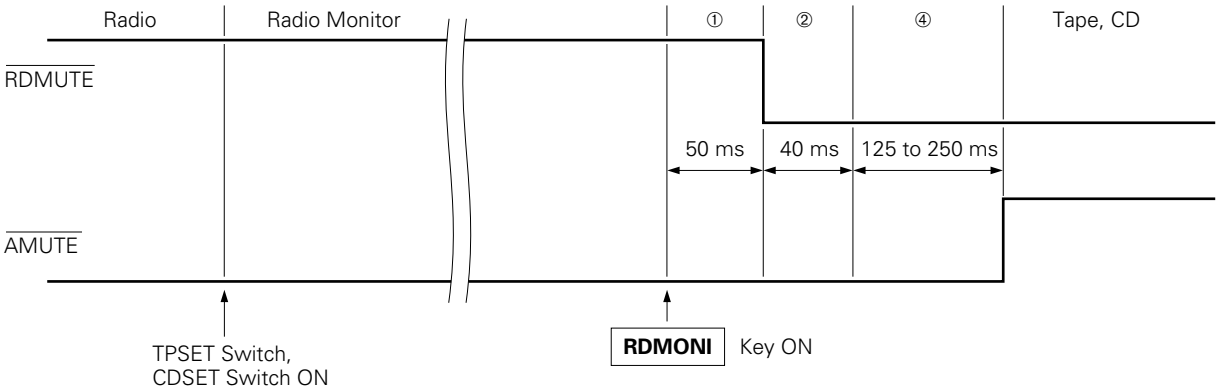

5. PIN I/O CIRCUITS

The I/O circuit of each pin of the μPD1723 is shown below in abbreviated form.

(1) LCD_0/KS_0 to LCD_{27}/PL_3, CGP, PB_0/SO to PB_3, PD_1 to PD_3, EO_1, EO_2

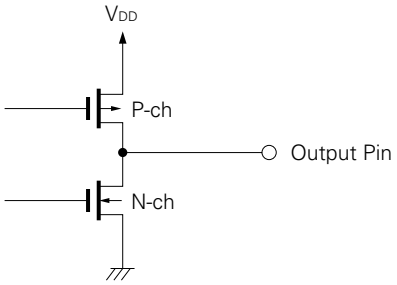

(2) $\overline{INT}$, AD

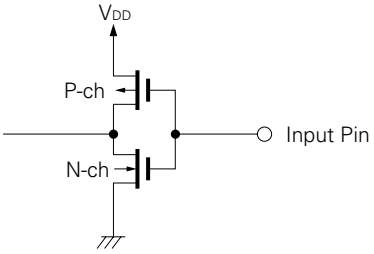

(3) PA_0/AMIF, PA_1/FMIF, PA_2/SI, $PA_3/\overline{SCK}$, PC_0 to PC_3

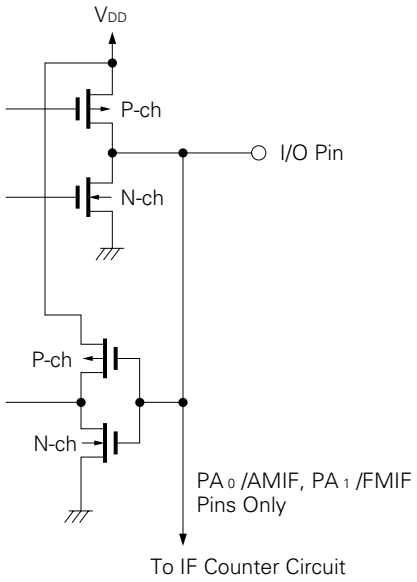

(4) COM_1, COM_2

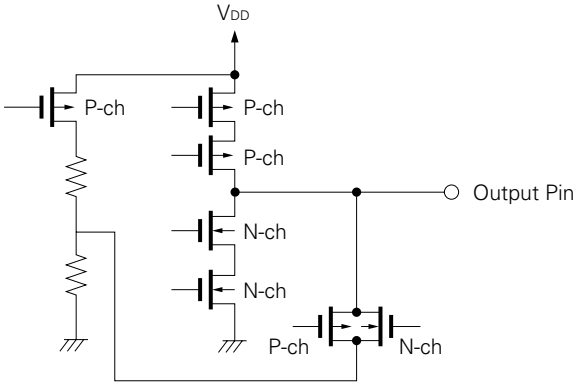

(5) K_0 to K_3

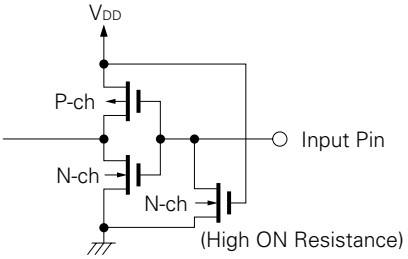

(6) VCOH, VCOL

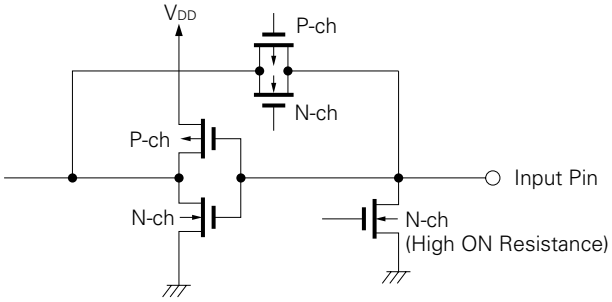

(7) CE

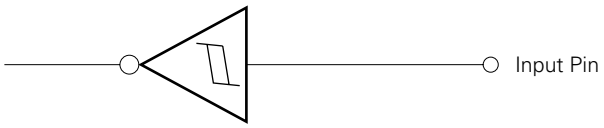

Schmitt Triggered Input with Hysteresis Characteristics

6. APPLICATION CIRCUITS

6.1 POWER ON/OFF (NO CLOCK DISPLAY AT POWER OFF) BY ALTERNATE SWITCH ( )

Radio ON by RDON switch = 1 and CE pin Low to High

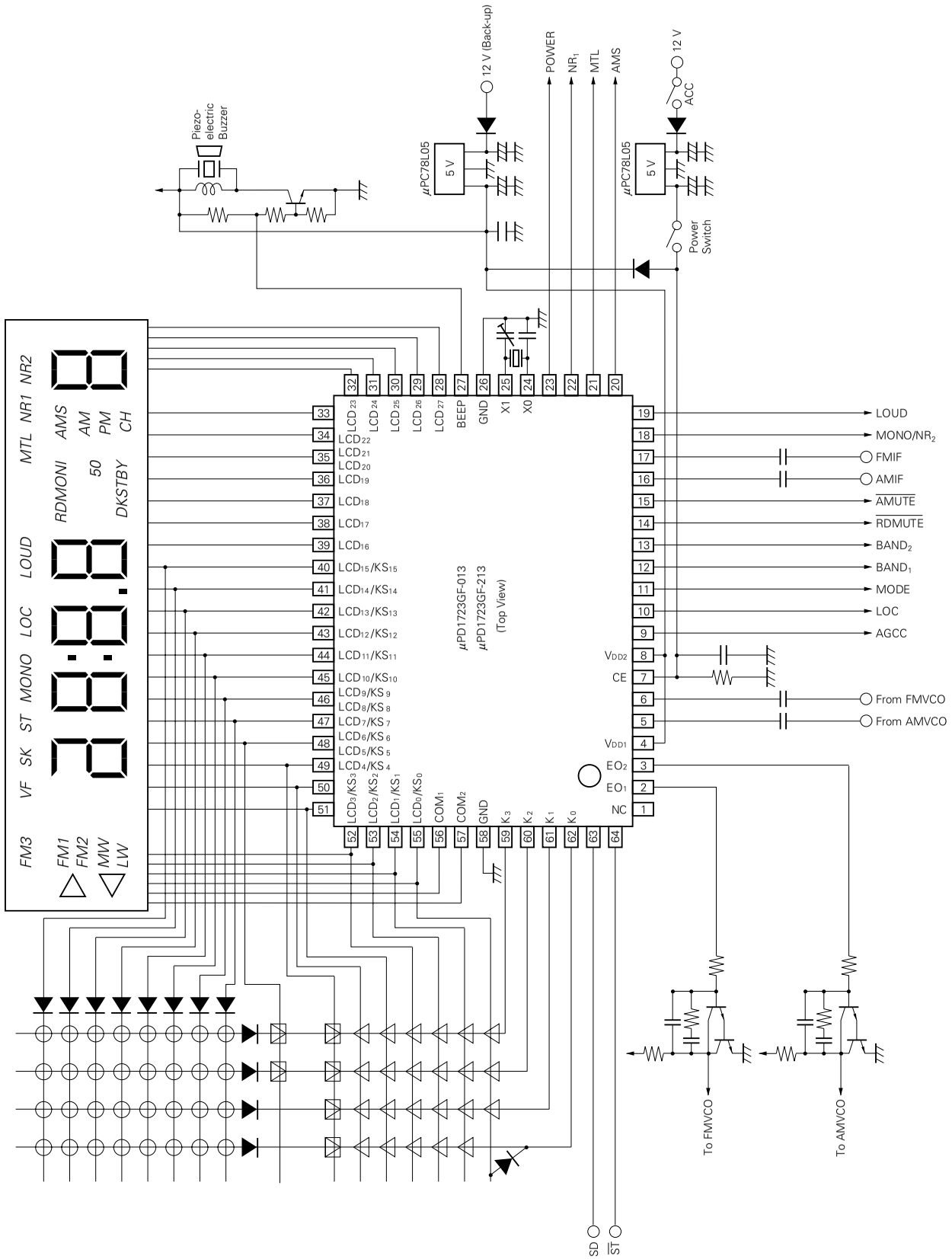

The application circuits and their parameters are for references only and are not intended for use in actual design-in's.

6.2 POWER ON/OFF (CLOCK DISPLAY AT POWER OFF) BY ALTERNATE SWITCH ( )

By RDSET switch

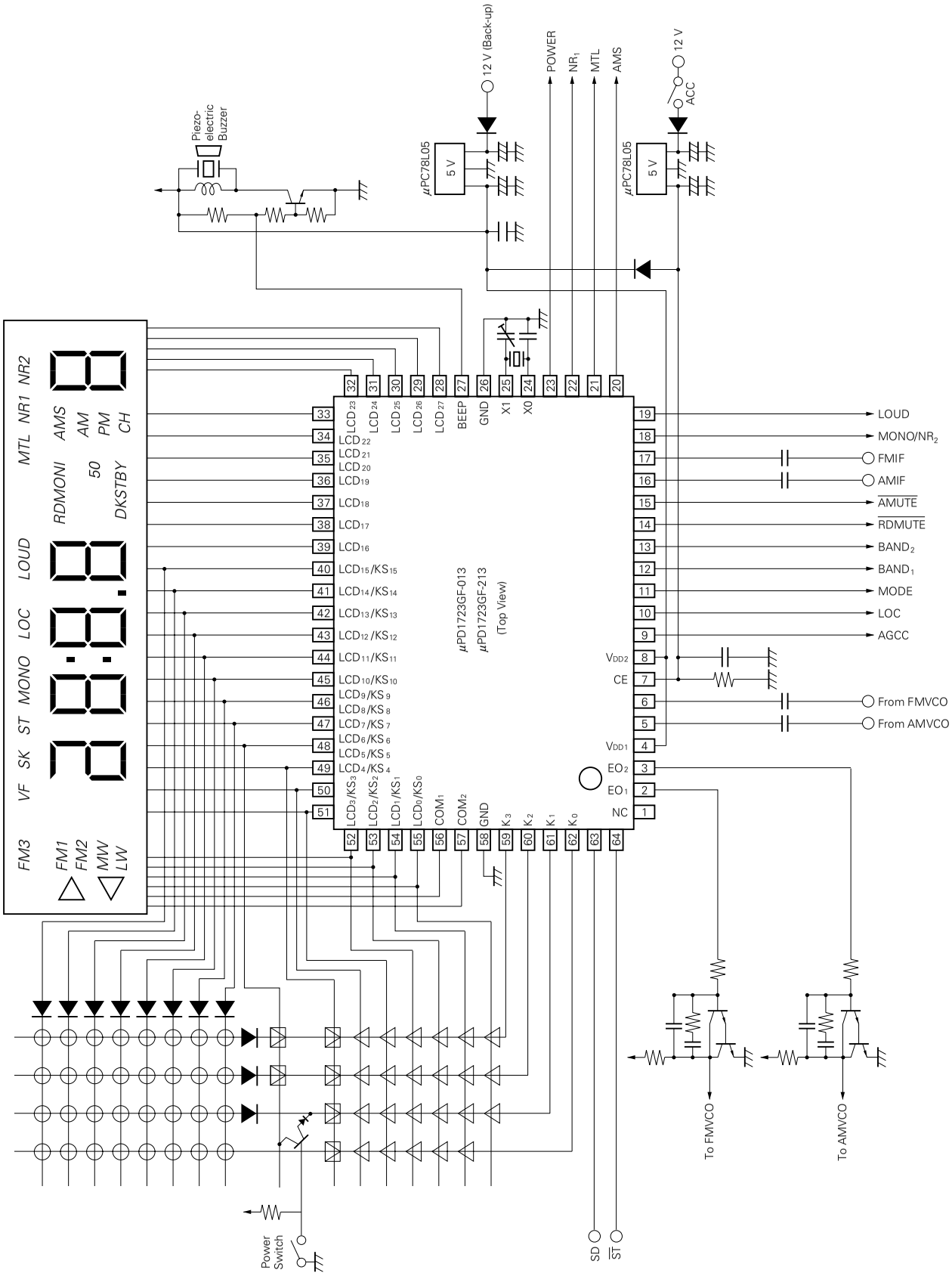

The application circuits and their parameters are for references only and are not intended for use in actual design-in's.

6.3 POWER ON/OFF (CLOCK DISPLAY AT POWER OFF) BY MOMENTARY SWITCH ( )

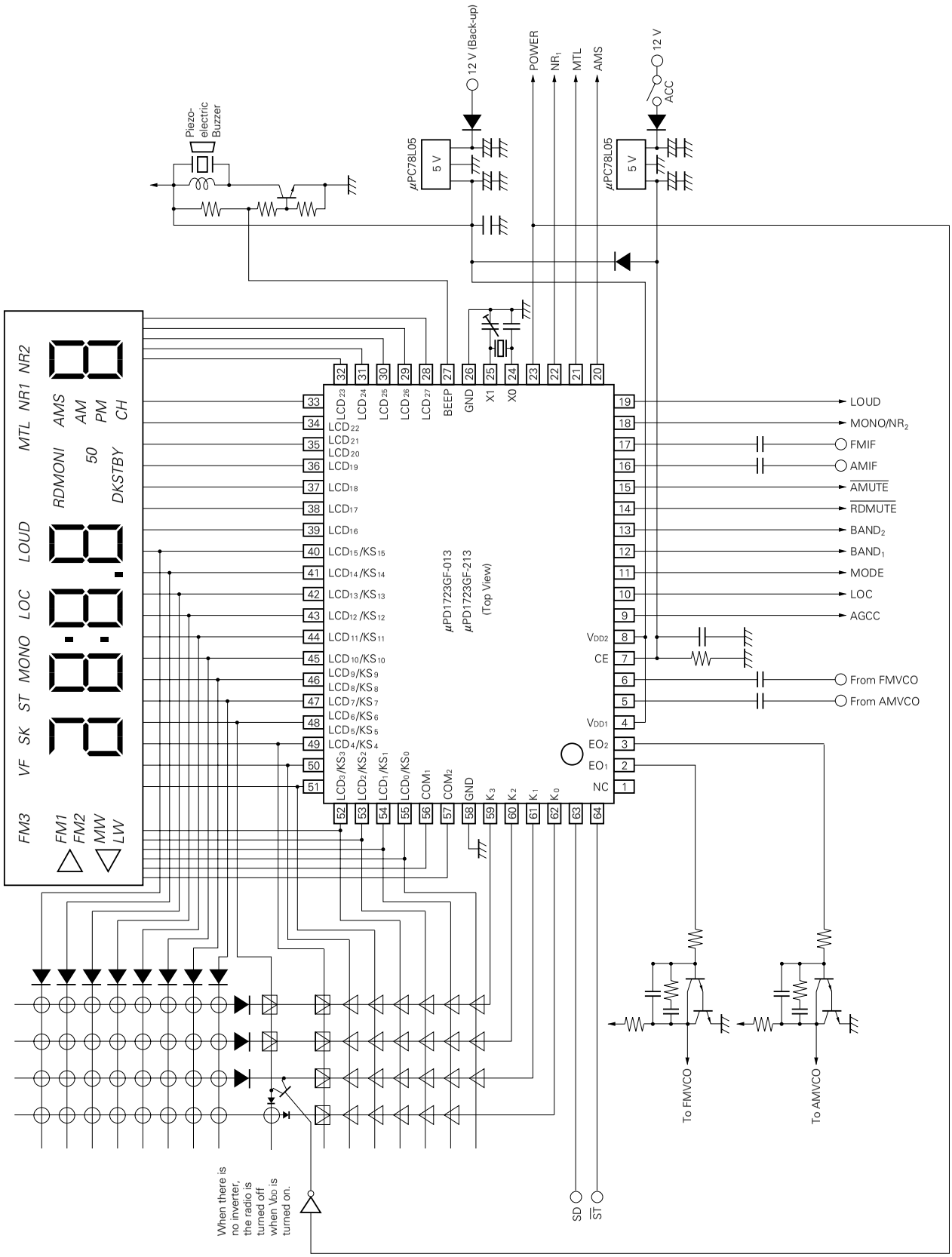

The application circuits and their parameters are for references only and are not intended for use in actual design-in's.

7. ELECTRICAL SPECIFICATIONS

ABSOLUTE MAXIMUM RATINGS

Power Supply Voltage	V_{DD}	–0.3 to +6.0	V
Input Voltage	V_I	–0.3 to +V_{DD} +0.3	V
Output Voltage	V_O	–0.3 to +V_{DD} +0.3	V
Output Sink Current	I_O	10	mA
Operating Temperature	T_a	–40 to +85	°C
Storage Temperature	T_{stg}	–55 to +125	°C

RECOMMENDED OPERATING RANGE

CHARACTERISTICS	SYMBOL	MIN.	TYP.	MAX.	UNIT	CONDITIONS
Power Supply Voltage	V_{DD1}	4.5	5	5.5	V	CPU, PLL operating
Power Supply Voltage	V_{DD2}	3.5	5	5.5	V	PLL stopped
Data Hold Voltage	V_{DR}	2.4		5.5	V	X'tal oscillation stopped
Power Supply Voltage Rise Time	T_{rise}			500	ms	V_{DD} = Low to High
Input Amplitude	V_{in1}	0.3		V_{DD}	V_{P-P}	VCOL, VCOH
Output Amplitude	V_{in2}	0.1		V_{DD}	V_{P-P}	AMIF, FMIF
Operating Temperature	T_a	–40		+85	°C	

DC CHARACTERISTICS (T_a = –40 to +85 °C, V_{DD} = 4.5 to 5.5 V)

CHARACTERISTICS	SYMBOL	MIN.	TYP.	MAX.	UNIT	CONDITIONS
Input Voltage High	V_{IH1}	0.7 V_{DD}			V	PORT A, C
Input Voltage High	V_{IH2}	0.8 V_{DD}			V	CE, $\overline{INT}$
Input Voltage High	V_{IH3}	0.6 V_{DD}			V	K_3 to K_0
Input Voltage Low	V_{IL1}			0.2 V_{DD}	V	PORT A, C, CE, $\overline{INT}$
Input Voltage Low	V_{IL2}			0.15 V_{DD}	V	K_3 to K_0
Output Current High	I_{OH1}	–0.4			mA	PORT A, B, C, D V_{OH} = V_{DD} –0.4 V
Output Current High	I_{OH2}	–0.5			mA	EO_1, EO_2, CGP, LCD_{27}/PL_3 to LCD_{24}/PL_0 V_{OH} = V_{DD} –1 V
Output Current High	I_{OH3}	–200	–280		μA	LCD_0 to LCD_{23} V_{OL} = V_{DD} –1 V
Output Current Low	I_{OL1}	0.6			mA	PORT A, B, C, D, CGP, LCD_{27}/PL_3 to LCD_{24}/PL_0 V_{OH} = 0.4 V
Output Current Low	I_{OL2}	0.5			mA	EO_1, EO_2 V_{OL} = 1 V
Output Current Low	I_{OL3}	200	300		μA	LCD_0 to LCD_{23} V_{OL} = 1 V
Input Current High	I_{IH1}	15	120	200	μA	K_3 to K_0 V_I = V_{DD} = 4.5 V
Input Current High	I_{IH2}	100			μA	VCOH, VCOL, XI V_I = V_{DD} = 4.5 V
Output Voltage	V_{COM1}	4.8	5.0		V	COM_1, COM_2 V_{DD} = 5 V, output open
Output Voltage	V_{COM2}	2.3	2.5	2.7	V	COM_1, COM_2 V_{DD} = 5 V, output open
Output Voltage	V_{COM3}	0	0.2		V	COM_1, COM_2 V_{DD} = 5 V, output open
Output off Leakage Current	I_L		10^{-3}	1	μA	EO_1, EO_2 V_O = V_{DD}, T_a = 25 °C
A/D Converter Resolution				6	bit	
A/D Converter Absolute Accuracy			1	1.5	LSB	T_a = –10 to +50 °C
Supply Current	I_{DD1}		20		mA	CPU and PLL operating (f_{in} = 150 MHz) V_{DD} = 5 V, T_a = 25 °C
Supply Current	I_{DD2}		0.5		mA	PLL stopped, CPU operating V_{DD} = 5 V, T_a = 25 °C
Data Hold Current	I_{DR}		3	10	μA	X'tal oscillation stopped, T_a = 25 °C V_{DD} = 5 V
AD Input Resistance	R_I	1			MΩ	

AC CHARACTERISTICS (T_a = –40 to +85 °C, V_{DD} = 4.5 to 5.5 V)

CHARACTERISTICS	SYMBOL	MIN.	TYP.	MAX.	UNIT	CONDITIONS
Operating Frequency	f_{in1}	10		200	MHz	VCOH pin (positive sine wave input) V_{in} = 0.3 V_{P-P}
Operating Frequency	f_{in2}	0.50		30	MHz	VCOL pin (positive sine wave input) V_{in} = 0.3 V_{P-P}
Operating Frequency	f_{in3}	1		20	MHz	PA_1/FMIF pin (positive sine wave input) V_{in} = 0.1 V_{P-P}
Operating Frequency	f_{in4}	0.3		5	MHz	PA_0/AMIF pin (positive sine wave input) V_{in} = 0.1 V_{P-P}

8. PACKAGE DIMENSION

64 PIN PLASTIC QFP (14×20)

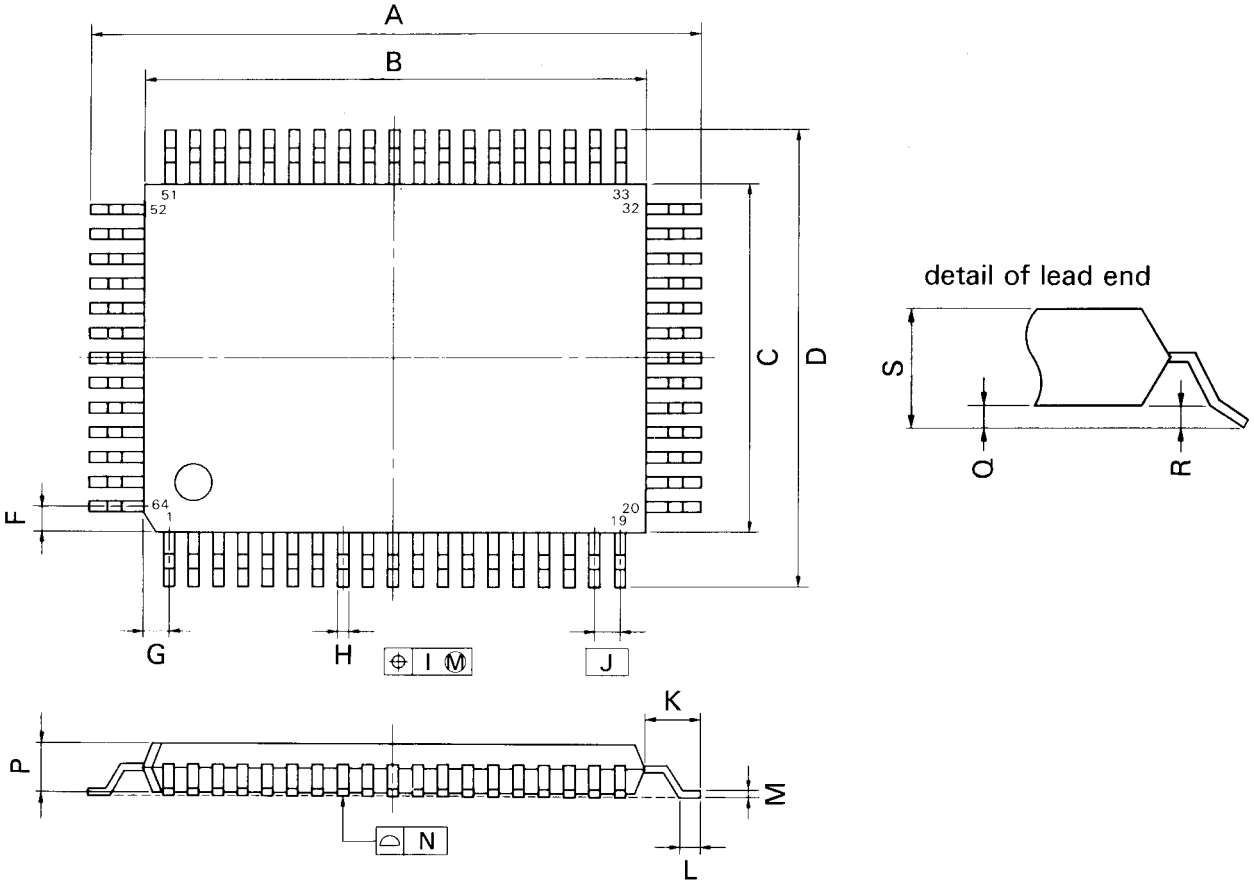

S64GF-100-3B8,3BE

NOTE

Each lead centerline is located within 0.20 mm (0.008 inch) of its true position (T.P.) at maximum material condition.

ITEM	MILLIMETERS	INCHES
A	$23.2^{\pm 0.4}$	$0.913^{+0.017}_{-0.016}$
B	$20^{\pm 0.2}$	$0.787^{+0.009}_{-0.008}$
C	$14^{+0.2}$	$0.551^{+0.009}_{-0.008}$
D	$17.2^{\pm 0.4}$	$0.677^{\pm 0.016}$
F	1.0	0.039
G	1.0	0.039
H	$0.40^{\pm 0.10}$	$0.016^{+0.004}_{-0.005}$
I	0.20	0.008
J	1.0 (T.P.)	0.039 (T.P.)
K	$1.6^{\pm 0.2}$	$0.063^{\pm 0.008}$
L	$0.8^{+0.2}$	$0.031^{+0.009}_{-0.008}$
M	$0.15^{+0.10}_{-0.05}$	$0.006^{+0.004}_{-0.003}$
N	0.15	0.006
P	2.7	0.106
Q	$0.1^{\pm 0.1}$	$0.004^{\pm 0.004}$
R	$0.1^{\pm 0.1}$	$0.004^{\pm 0.004}$
S	3.0 MAX.	0.119 MAX.

64PIN PLASTIC QFP (STRAIGHT) (14×20)

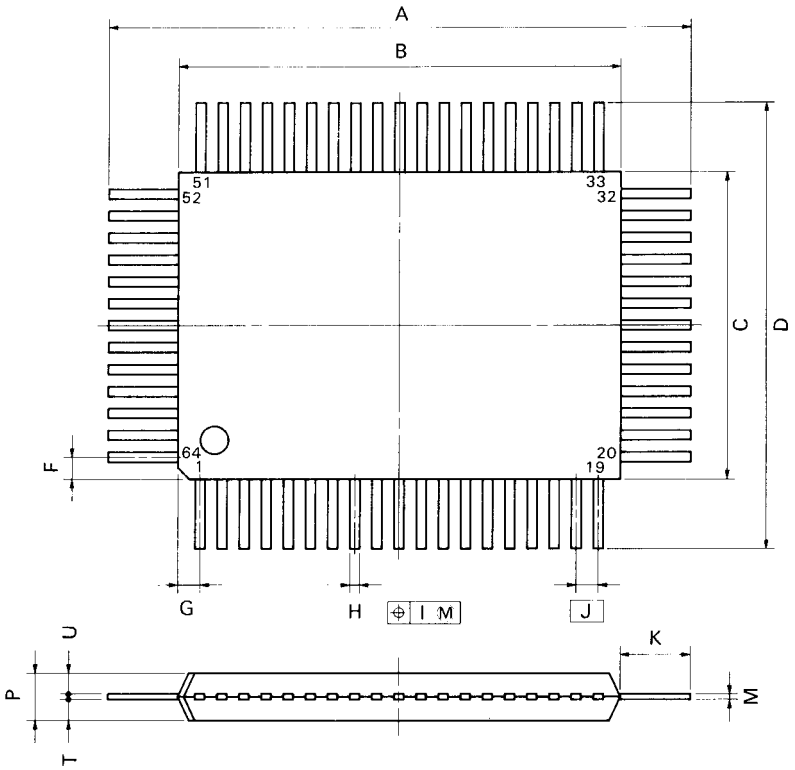

P64GF-100-3KE

NOTE

Each lead centerline is located within 0.20 mm (0.008 inch) of its true position (T.P.) at maximum material condition.

ITEM	MILLIMETERS	INCHES
A	$24.4^{\pm 0.4}$	$0.961^{+0.016}_{-0.017}$
B	$20.0^{\pm 0.2}$	$0.787^{+0.009}_{-0.008}$
C	$14.0^{\pm 0.2}$	$0.551^{+0.009}_{-0.008}$
D	$18.4^{\pm 0.4}$	$0.724^{+0.017}_{-0.016}$
F	1.0	0.039
G	1.0	0.039
H	$0.40^{\pm 0.10}$	$0.016^{+0.004}_{-0.005}$
I	0.20	0.008
J	1.0 (T.P.)	0.039 (T.P.)
K	$2.2^{\pm 0.2}$	$0.087^{+0.008}_{-0.009}$
M	$0.15^{+0.10}_{-0.05}$	$0.006^{+0.004}_{-0.003}$
P	2.7	$0.081^{+0.008}_{-0.005}$
T	1.0	0.039
U	1.55	0.061

9. RECOMMENDED SOLDERING CONDITIONS

The following conditions (see table below) must be met when soldering this product.

Please consult with our sales offices in case other soldering process is used, or in case soldering is done under different conditions.

TYPES OF SURFACE MOUNT DEVICE

For more details, refer to our document "SMT MANUAL" (IEI-1207)

μPD1723GF-013, μPD1723GF-213

Soldering process	Soldering conditions	SYMBOL
Infrared ray reflow	Peak package's surface temperature : 230 °C or below, Reflow time : 30 seconds or below (210 °C or higher), Number of reflow process : 1, Exposure limit* : None	IR30-00
VPS	Peak package's surface temperature : 215 °C or below, Reflow time : 40 seconds or below (200 °C or higher), Number of reflow process : 1, Exposure limit* : None	VP15-00
Wave soldering	Solder temperature : 260 °C or below, Flow time : 10 seconds or below, Number of flow process : 1, Exposure limit* : None	WS60-00
Partial heating method	Terminal temperature : 300 °C or below, Flow time : 10 seconds or below, Exposure limit* : None	

***:** Exposure limit before soldering after dry-pack package is opened.
Storage conditions : 25 °C and relative humidity at 65 % or less.

Note: Do not apply more than a single process at once, except for "Partial heating method".

[MEMO]

[MEMO]

No part of this document may be copied or reproduced in any form or by any means without the prior written consent of NEC Corporation. NEC Corporation assumes no responsibility for any errors which may appear in this document.
NEC Corporation does not assume any liability for infringement of patents, copyrights or other intellectual property rights of third parties by or arising from use of a device described herein or any other liability arising from use of such device. No license, either express, implied or otherwise, is granted under any patents, copyrights or other intellectual property rights of NEC Corporation or others.
The devices listed in this document are not suitable for use in the field where very high reliability is required including, but not limited to, aerospace equipment, submarine cables, nuclear reactor control systems and life support systems. If customers intend to use NEC devices for above applications or those intend to use "Standard", or "Special" quality grade NEC devices for the applications not intended by NEC, please contact our sales people in advance.
Application examples recommended by NEC Corporation

Standard: Data processing and office equipment, Communication equipment (terminal, mobile), Test and Measurement equipment, Audio and Video equipment, Other consumer products, etc.

Special: Automotive and Transportation equipment, Communication equipment (trunk line), Train and Traffic control devices, Industrial robots, Burning control systems, antidisaster systems, anticrime systems etc.