QT OPTOELECTRONICS

SUPER BRIGHT T-1 (3mm) LED LAMP - Water Clear

AlInGaP Red **MV7042** **MV7043** **MV7044**

PACKAGE DIMENSIONS

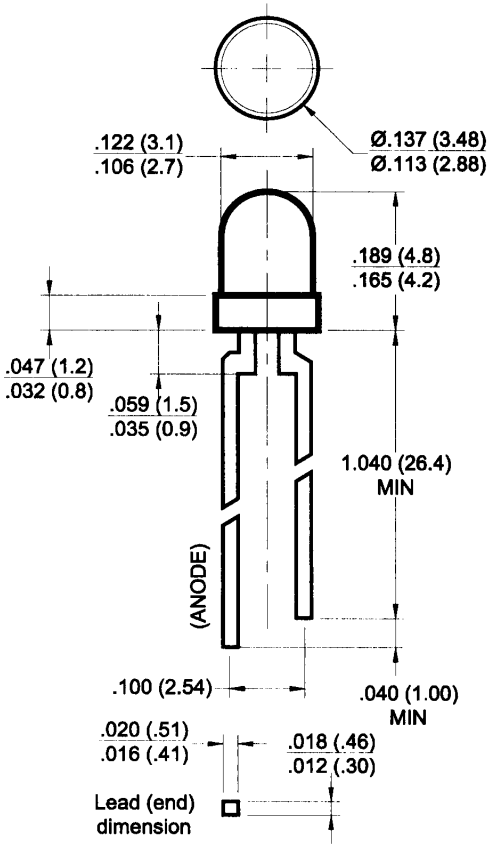

Note: 1) All dimensions are in inches (mm).
2) Lead spacing is measured where the leads emerge from the package.
3) Protruded resin under the flange is 1.5mm (0.059") max.

DESCRIPTION

These T-1 LEDs have a wide viewing angle of 60° and are encapsulated in an epoxy package with a water clear lens. They are constructed with AlInGaP LEDs and emit a peak wavelength of 645 nm.

FEATURES

- **Popular T-1 package.**
- **Low drive current.**
- **Solid State reliability.**
- **Super high brightness suitable for outdoor applications.**
- **Water clear optics.**
- **Standard 100 mil. Lead spacing.**

ABSOLUTE MAXIMUM RATINGS (T_A=25°C unless otherwise specified)

DC forward current (I_F)	30 mA
Peak forward current (I_F) @ f = 1.0 KHz, Duty factor = 1/10	160 mA
Power dissipation (P_d)	85 mW
Reversed voltage (V_R) I_R = 10 µA	5 V
Operating temperature range	-40°C to +100°C
Storage temperature range	-40°C to +100°C
Lead soldering time	5 secs @ 260°C

QT OPTOELECTRONICS

SUPER BRIGHT T-1 (3mm) LED LAMP - Water Clear

ELECTRO-OPTICAL CHARACTERISTICS (T_A=25°C unless otherwise specified)

Part Number:	MV7042	MV7043	MV7044	Test Condition
Luminous intensity (mcd)				I_F = 20 mA
Minimum	100	160	250	
Typical	150	240	375	
Forward voltage (V_F)				I_F = 20 mA
Typical	2.1	2.1	2.1	
Maximum	2.8	2.8	2.8	
Peak Wavelength	645	645	645	I_F = 20 mA
Spectral line half width (nm)	20	20	20	I_F = 20 mA
Viewing angle	60	60	60	I_F = 20 mA

TYPICAL ELECTRO-OPTICAL CHARACTERISTIC CURVES (T_A = 25°C)

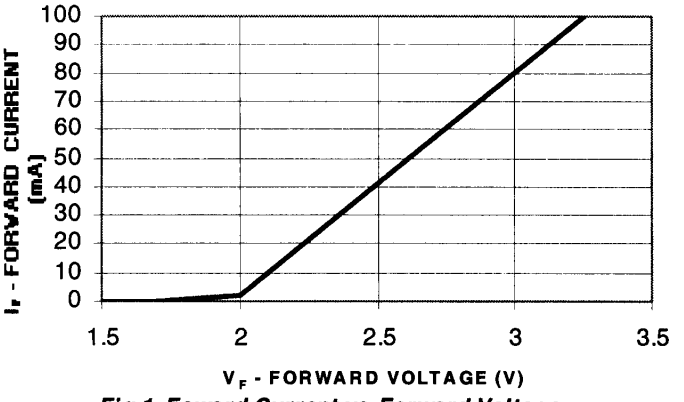

Fig 1. Foward Current vs. Forward Voltage

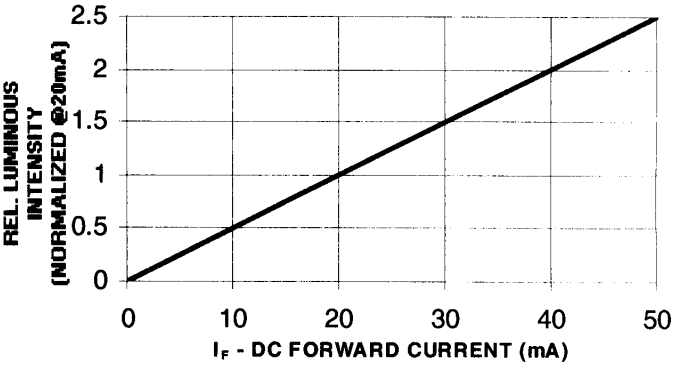

Fig 2. Rel. Luminous Intensity vs. DC Forward Current

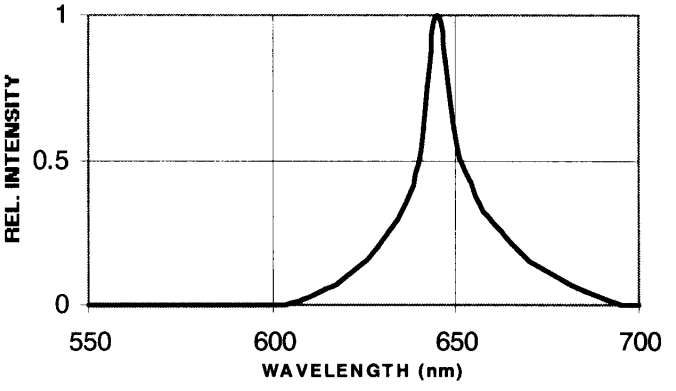

Fig 3. Rel. Intensity vs. Wavelength

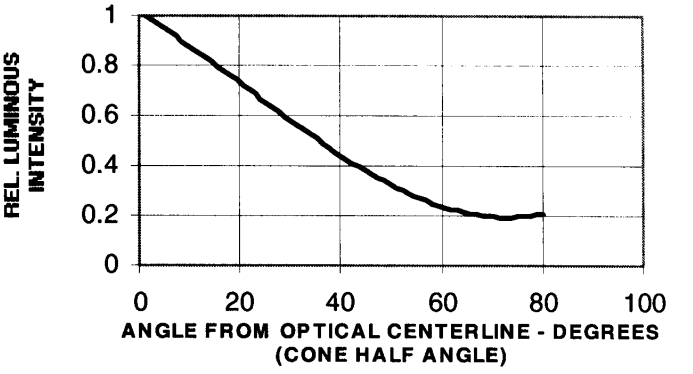

Fig 4. Rel. Luminous Intensity vs. Angular Displacement