TENTATIVE TOSHIBA BIPOLAR LINEAR INTEGRATED CIRCUIT SILICON MONOLITHIC

TA8795BF

VIDEO SIGNAL PROCESSOR IC FOR LCD TVs

Offered in a flat 60-pin plastic package, the TA8795BF is a multi-system IC integrating video, chroma, and sync signal processor circuits for PAL, NTSC, and SECAM systems with B, G, M, and N variations. Such automatic signal detection functions as PAL / NTSC / SECAM chroma system detection, 4.43 / 3.58MHz subcarrier detection, and 50 / 60Hz vertical sync frequency detection make this IC ideal for processing the signals of portable LCD televisions designed to be used anywhere in the world. (Uses M / N PAL external detection.)

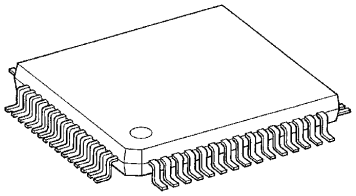

QFP60-P-1414-0.80F

Weight : 0.8g (Typ.)

FEATURES

Video circuit

- Brightness control, unicolor control
- Second-order differential sharpness control
- Black stretch circuit
- DC restoration adjustable circuit
- YNR (coring)
- γ correction (two-point approximation)

Chroma circuit

- Color control, tint control
- Automatic detection of PAL / NTSC / SECAM systems, system forced mode
- Automatic detection of 3.58 / 4.43MHz subcarrier frequency (M / N PAL detected externally)
- Direct PAL demodulation (without 1H delay line)

Sync circuit

- Auto slice sync separator circuit
- Countdown horizontal oscillator circuit
- Automatic detection of 50 / 60Hz vertical sync frequency
- Sync separation output

Demodulation output circuit

- Selectable output between RGB and YUV

961001EBA1

- TOSHIBA is continually working to improve the quality and the reliability of its products. Nevertheless, semiconductor devices in general can malfunction or fail due to their inherent electrical sensitivity and vulnerability to physical stress. It is the responsibility of the buyer, when utilizing TOSHIBA products, to observe standards of safety, and to avoid situations in which a malfunction or failure of a TOSHIBA product could cause loss of human life, bodily injury or damage to property. In developing your designs, please ensure that TOSHIBA products are used within specified operating ranges as set forth in the most recent products specifications. Also, please keep in mind the precautions and conditions set forth in the TOSHIBA Semiconductor Reliability Handbook.
- The products described in this document are subject to foreign exchange and foreign trade control laws.
- The information contained herein is presented only as a guide for the applications of our products. No responsibility is assumed by TOSHIBA CORPORATION for any infringements of intellectual property or other rights of the third parties which may result from its use. No license is granted by implication or otherwise under any intellectual property or other rights of TOSHIBA CORPORATION or others.
- The information contained herein is subject to change without notice.

BLOCK DIAGRAM

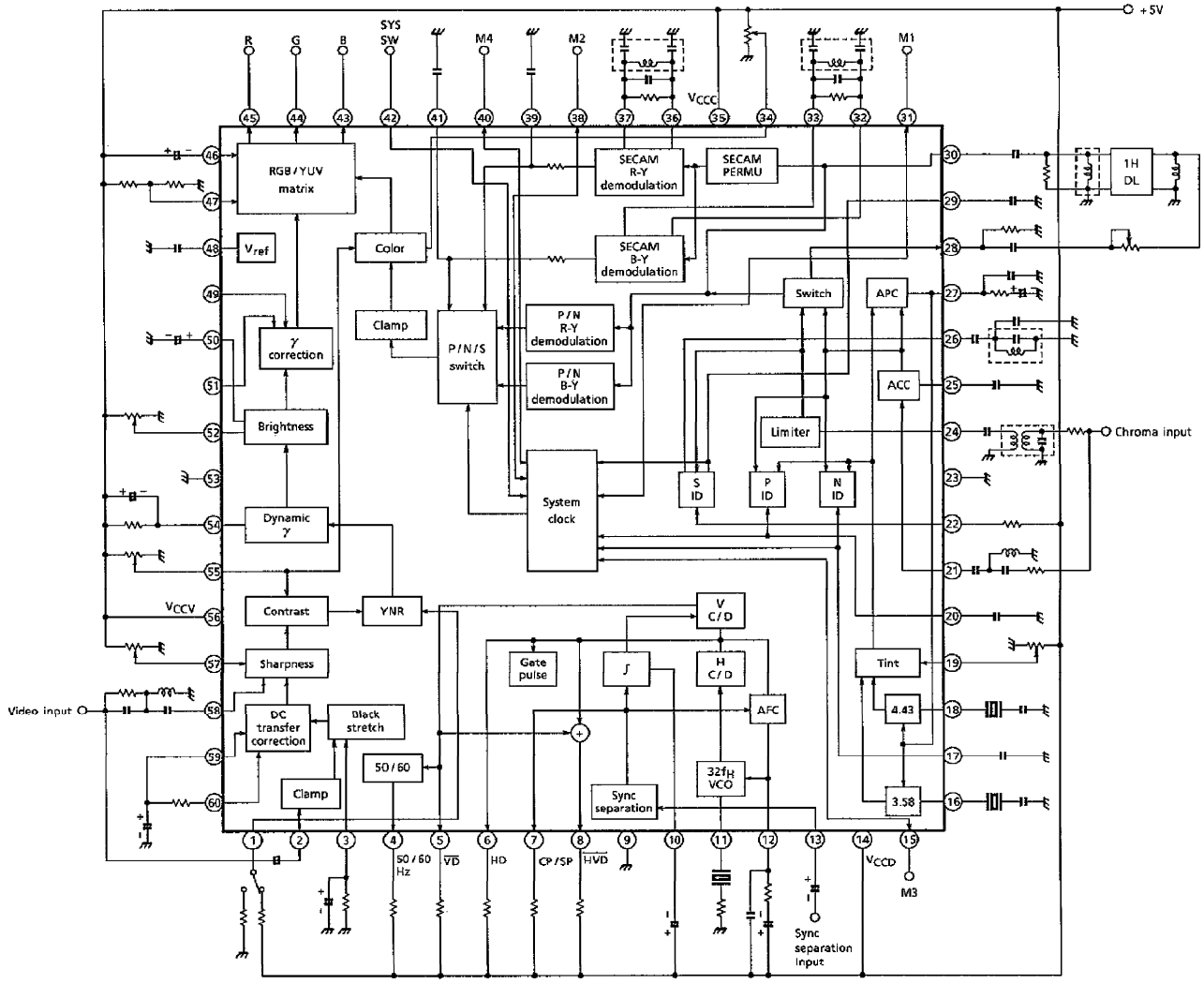

TA8795BF – 2

PIN FUNCTIONS

PIN No.	PIN NAME	FUNCTION	INTERFACE
1	YNR switch	YNR circuit switching pin. This pin also features a SECAM inhibit mode. For switching between the modes, see the Technical Data on P.13.	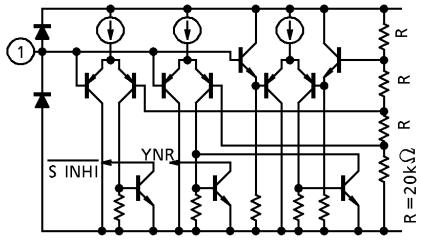
2	Y_{in}	Video signal input pin. The typical input level is $0.5V_{p-p}$.	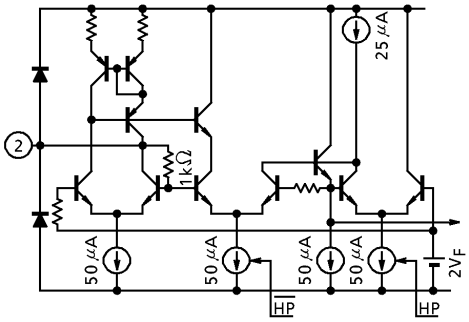
3	Maximum black detection	Maximum black level detection filter pin.	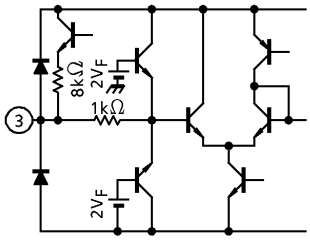
4	50 / 60Hz output	Detects 50 / 60Hz vertical sync frequency. 50Hz triggers low-level output; 60Hz triggers high-level output.	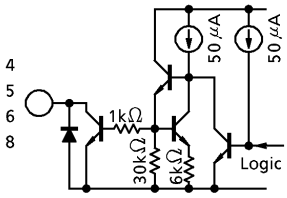
5	$\overline{VD}$ output	$\overline{VD}$ output pin.	
6	HD output	HD output pin.	
8	HD + VD output	HD + VD output pin.	
7	CP / SP output	CP / SP output pin.	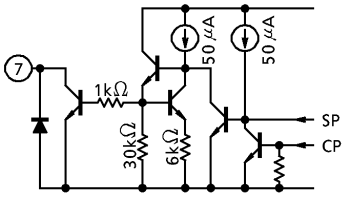
9	Def. GND	Def. ground pin.	—

PIN No.	PIN NAME	FUNCTION	INTERFACE
10	Vertical sync separation filter	Vertical sync signal separation filter pin.	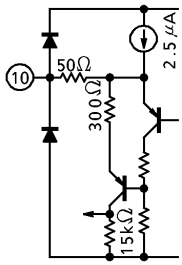
11	$32f_H$ VCO	$32f_H$ VCO connecting pin.	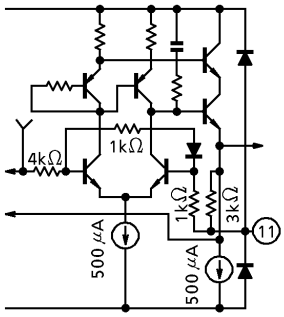
12	AFC filter	AFC filter pin.	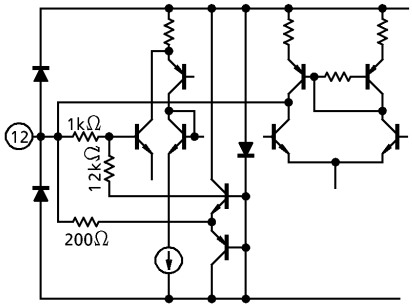
13	Sync separation input	Sync signal separation input pin. The typical input level is $1V_{p\text{-}p}$.	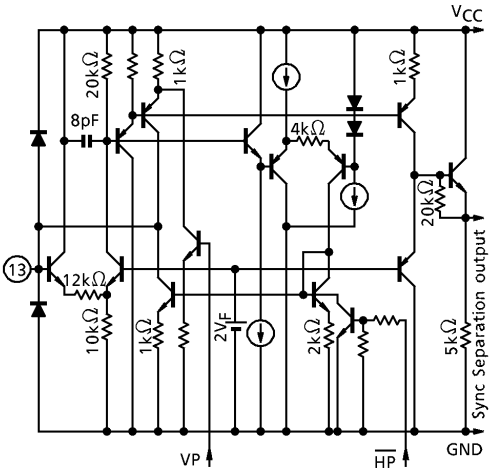
14	Def. V_{CC}	Def. V_{CC} pin.	—

PIN No.	PIN NAME	FUNCTION	INTERFACE
15	M3 (Mode switch 3)	Receive mode switching pin. For switching between the modes, see the Technical Data on P.12 and 13.	
16	3.58 / M / N VCXO	Connects 3.58MHz / M / N subcarrier VCXO.	
18	4.43MHz VCXO	Connects 4.43MHz subcarrier VCXO.	
17	NTSC ID	NTSC signal identification pin.	
19	Tint	Tint adjustment pin.	
20	PAL ID	PAL signal identification pin.	

PIN No.	PIN NAME	FUNCTION	INTERFACE
21	Chroma input	PAL / NTSC chroma signal input pin.	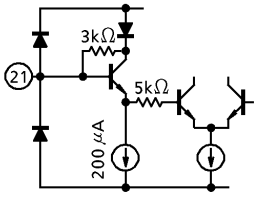
22	SECAM ID. switch	SECAM H-ID / V-ID switching pin. High level : H ID Low level : H + V ID	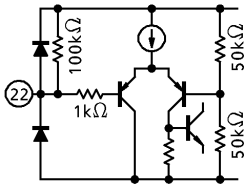
23	Chroma GND	Chroma ground pin.	—
24	SECAM input	SECAM chroma signal input pin.	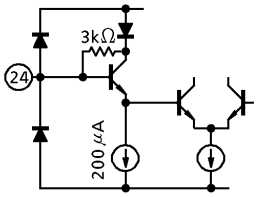
25	ACC filter	ACC filter pin.	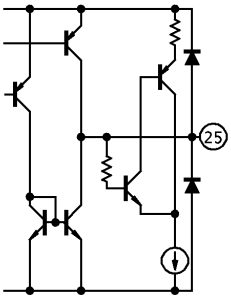
26	S-ID detector	SECAM ID detector pin.	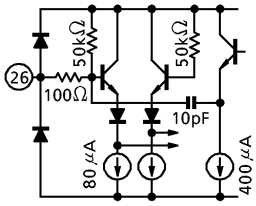

PIN No.	PIN NAME	FUNCTION	INTERFACE
27	APC filter	Chroma APC filter pin.	
28	1H delay line output	Outputs to the 1H delay line.	
29	SECAM ID	SECAM ID filter pin.	
30	1H delay line input	Inputs to the 1H delay line.	
31	M1 (Mode switch 1)	Receive mode switching pin. For switching between the modes, see the Technical Data on P.12 and 13.	

PIN No.	PIN NAME	FUNCTION	INTERFACE
32 33	SECAM B-Y detection 1, 2	SECAM B-Y demodulation pins.	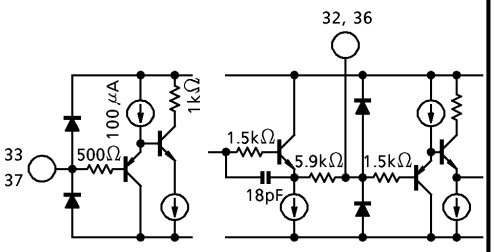
36 37	SECAM R-Y detection 1, 2	SECAM R-Y demodulation pins.	
34	Color	Color adjustment pin.	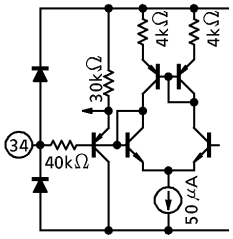
35	Chroma V_{CC}	Chroma V_{CC} pin.	—
38	M2 (Mode switch 2)	Receive mode switching pin. For switching between the modes, see the Technical Data on P.12 and 13.	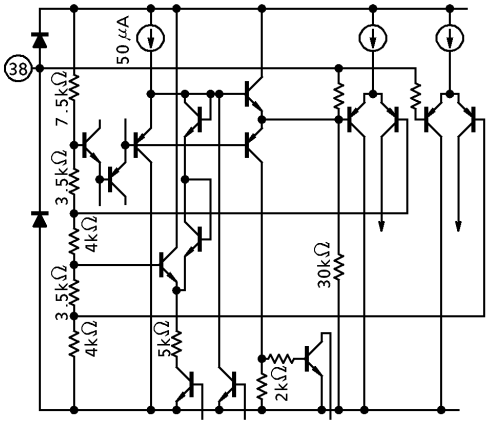
39 41	SECAM de-emphasis	SECAM de-emphasis pins.	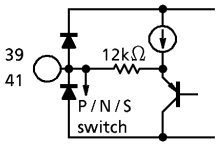

PIN No.	PIN NAME	FUNCTION	INTERFACE
40	M4 (Mode switch 4)	Receive mode switching pin. For switching between the modes, see the Technical Data on P.12 and 13.	
42	SYS SW (system switch)	Receiver system switch. For system switching, see the Technical Data on P.12.	
43 44 45	R, G, B output	R (R-Y), G (Y), and B (B-Y) output pins.	
46	Clamp filter	G output clamp filter.	
47	PIP switch	R, G, B, and R-Y, B-Y, and Y output switch. Also switches between clamp pulse output and sync pulse separation output of pin 7. For switching between the modes, see the Technical Data on P.13.	

PIN No.	PIN NAME	FUNCTION	INTERFACE
48	$V_{ref.}$ filter	$V_{ref.}$ filter pin.	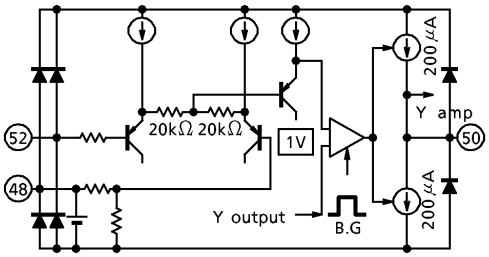
50	Brightness filter	Brightness clamp filter.	
52	Brightness	Brightness control pin.	
49	γ correction 2	Sets the γ correction point.	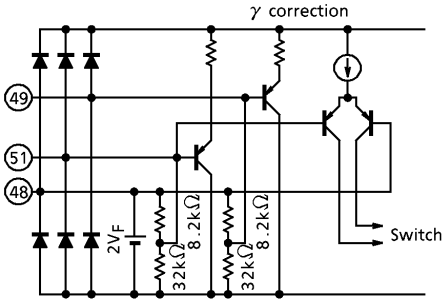
51	γ correction 1	Sets the γ correction point.	
53	Video GND	Video signal ground pin.	
54	Dynamic γ filter	Dynamic γ filter pin.	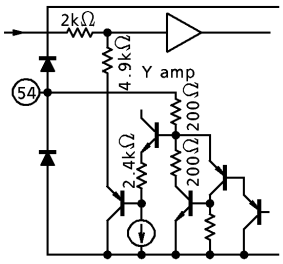
55	Contrast	Contrast control pin.	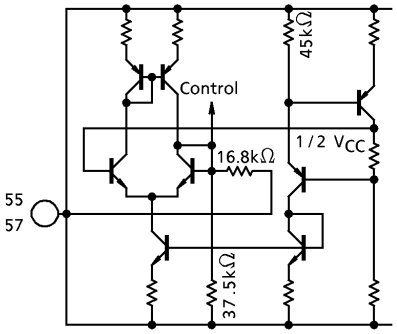
57	Sharpness	Sharpness control pin.	
56	Video V_{CC}	Video V_{CC} pin.	—

PIN No.	PIN NAME	FUNCTION	INTERFACE
58	YH input	Second-order differential signal input pin for sharpness.	
59	Black stretch point	Determines the black stretch point.	
60	DC transfer correction filter	DC transfer correction filter pin.	

○ System switch specifications (Unless otherwise specified, V_{CC} = 4.5V, Ta = 25°C ± 3°C)

Pin 42 system switch

SYS SW (PIN 42)	MODE	RECEIVER SYSTEM
V_{CC}	Normal mode	PAL (B / G, etc), NTSC (3.58 / 4.43), SECAM
1 / 2 V_{CC}	South American mode	M, N, PAL (M / N / B / G, etc), NTSC (3.58 / 4.43), SECAM
GND (*)	Pseudo-PAL mode	M, N, PAL (M / N / B / G, etc), NTSC (3.58 / 4.43)

(*) In Pseudo-PAL mode, PAL demodulation uses the NTSC demodulation circuit, CW tint adjustment is supported, and a 1H delay line is not required (direct PAL demodulation).

(1) Normal mode (pin 42-V_{CC})

Color system automatic detection output

RECEIVED SIGNAL	M1 PIN 31	M2 PIN 38	M3 PIN 15	M4 PIN 40
PAL	H	H	M	L
SECAM	H	M	M	L
4.43NTSC	L	H	M	L
3.58NTSC	L	L	M	L
Black & white	L	M / L	L	L

H : 3V
M : 1.5V
L : 0V

Color system forced mode

INPUT MODE				SYSTEM
M1	M2	M3	M4	
H	H	H	Open	PAL
H	(**)	H	Open	SECAM
(**)	H	H	Open	4.43NTSC
(**)	(**)	H	Open	3.58NTSC

V_{th} = 2.3V
(**) High-impedance drive

Special system switches

SW_2 : Input current switch (I_{th} = 0.6mA) ... PAL / SECAM receive mode

SW_3 : Input current switch (I_{th} = 0.6mA) ... Forced black & white mode (in PAL / SECAM mode)

YNR : Voltage switch (V_{th} = 1.5V) ..... PAL / NTSC receive mode

Vertical sync detection output

Pin 4 ..... High level = 60Hz
Low level = 50Hz

(2) South American mode / Pseudo-PAL mode (pin 42-1 / 2 V_{CC} / GND)

Automatic color system detection output

RECEIVED SIGNAL	M1 PIN 31	M2 PIN 38	M3 PIN 15	M4 PIN 40
PAL (M / N)	H	L	M	M
PAL (B / G, etc)	H	H	M	L
SECAM	H	M	M	L
4.43NTSC	L	H	M	L
3.58NTSC	L	L	M	L
Black & white	L	M / L	L	L

H : 3V
M : 1.5V
L : 0V

Forced color system mode

INPUT MODE				SYSTEM
M1	M2	M3	M4	
(**)	(**)	(**)	H#	PAL (M / N)
H	H	H	(**)	PAL (B / G, etc)
H	(**)	H	(**)	SECAM
(**)	H	H	(**)	4.43NTSC
(**)	(**)	H	(**)	3.58NTSC

V_{th} = 2.3V
(**) High-impedance drive
: In this mode, the pin is internally clamped to 3.75V. Does not support switching driven by current to the pin.

(Note) Because a 1H delay line is not used, SECAM cannot be demodulated in Pseudo-PAL mode. (Same as SECAM non-supported mode.)

○ Switches

YNR switch

PIN 1 VOLTAGE	YNR	RECEIVER SYSTEM
V_{CC}	OFF	P / N / S
2 / 3 V_{CC}		P / N
1 / 3 V_{CC}	ON	
GND		P / N / S

SECAM ID switch

Pin 22 Voltage : High level = H ID
Low level = H + V ID (V_{th} = 1 / 2 V_{CC})

Output signal mode switches

PIN 47 VOLTAGE	OUTPUT SIGNAL	CP / SP
V_{CC}	RGB	CP
1 / 2 V_{CC}		SP
GND	YUV	

CP : Clamp pulse
SP : Sync separation output
RGB : Primary color output (pins 45 / 44 / 43 : R / G / B output)
YUV : Color difference output (pins 45 / 44 / 43 : R-Y / Y / B-Y output)

γ correction switch

Pin 51 voltage : $2V_F$ or higher : Off
$2V_F$ or lower : On (V_{th} = $2V_F$)

○ Flow Chart for Color System Detection

(1) Normal mode (pin 42-V_{CC})

Receiver system priority

AT PIN 18 X'tal OSCILLATION	AT PIN 16 X'tal OSCILLATION
4.43PAL	—
—	3.38NTSC
SECAM	SECAM
4.43NTSC	—

Detection flow chart

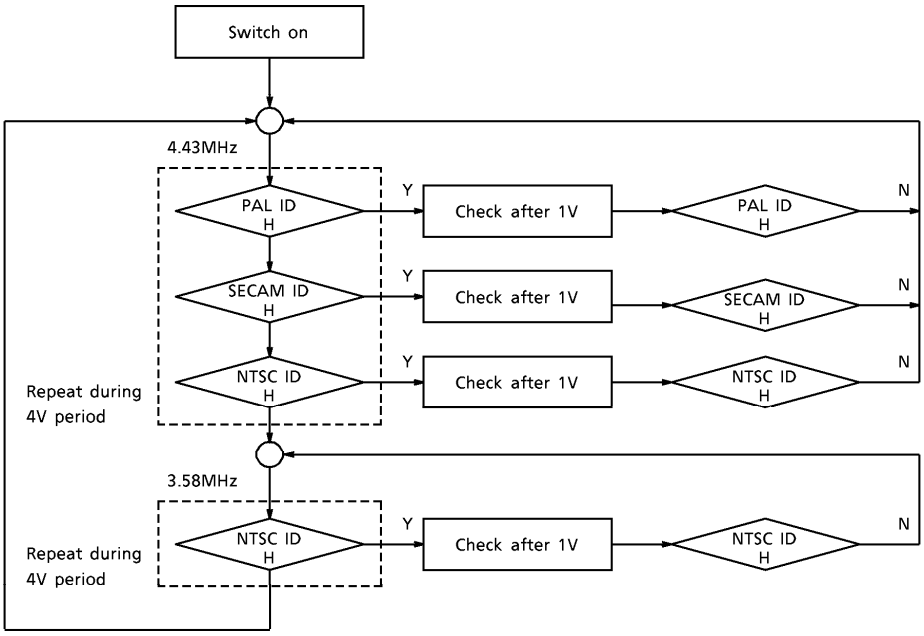

○ Flow Chart for Color System Identification

(2) South American mode / Pseudo-PAL mode (pin 42-1 / 2 V_{CC} / GND)

Receiver system priority

AT PIN 18 X'tal OSCILLATION	AT PIN 16 X'tal OSCILLATION
4.43PAL	—
—	N / M PAL
—	3.58NTSC
(SECAM)	(SECAM)
4.43NTSC	—

SECAM signals are not received in Pseudo-PAL mode.

Detection flow chart

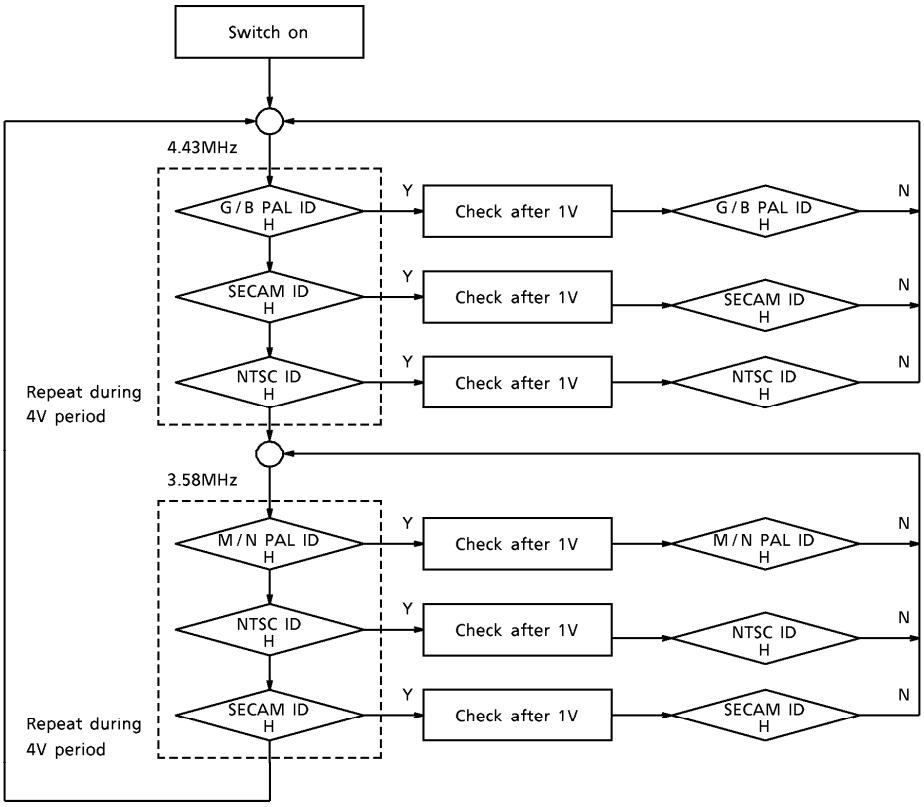

MAXIMUM RATINGS (Unless otherwise specified, V_{CC} = 5V, Ta = 25°C)

ITEM	SYMBOL	RATING	UNIT
Supply Voltage	V_{CC}	7	V
Power Dissipation	P_D max (Note 1)	800	mW
Input Signal Voltage	e_{in}	2	V_{p-p}
Pin Voltage	V_{in}	GND − 0.2~V_{CC} + 0.2	V
Operating Temperature	T_{opr}	− 10~65	°C
Storage Temperature	T_{stg}	− 55~150	°C

(Note 1) When the IC is mounted on the PCB. If the IC is operated at 25°C or higher, reduce power dissipation by 6.4mW per degree.

(Note 2) In some areas, depending on the input signal state, automatic identification function or killer function may malfunction.

RECOMMENDED OPERATING CONDITIONS

ITEM	SYMBOL	MIN.	TYP.	MAX.	UNIT	REMARKS
Video Block Supply Voltage	V_{CC56}	4.0	5.0	5.5	V	In Multi mode
Chroma Block Supply Voltage	V_{CC35}	4.0	5.0	5.5	V	
Sync Supply Voltage	V_{CC14}	4.0	5.0	5.5	V	
Video Input Signal	Y_{in}	—	0.5	—	V_{p-p}	—
Second-order Differential Input	YH_{in}	—	75	—	mV_{p-p}	—
Chroma Input Signal	$C_{in\ P/N}$	—	100	—	mV_{p-p}	—
	C_{inS}	—	300	—		—
Sync Separation Input Signal	S_{in}	—	1.0	—	V_{p-p}	—
Control Pin Voltage	$V_{19,\ 34,\ 55,\ 57}$	0	2.5	5.0	V	Pins 19, 34, 55, 57
SECAM ID Switch	V_{22}	4.7	5.0	5.0	V	When H-ID selected
PIP Switch	V_{47}	2.2	2.5	5.0	V	In RGB output mode

ELECTRICAL CHARACTERISTICS

Power consumption (Unless otherwise specified, V_{CC} = 5V, Ta = 25°C ± 3°C)

BLOCK NAME	TYPICAL IC INTERNAL CURRENT (mA)	V_{CC} (V)	P_C (mW)
Video	8.1	5	40.5
Chroma	33.83	5	169.15
Sync	14.33	5	71.65
Total	56.26	5	281.3

DC Characteristics

Pin DC voltage (Unless otherwise specified, V_{CC} = 5V, Ta = 25°C ± 3°C)

CIRCUIT TYPE	PIN No.	PIN NAME	SYMBOL	MIN.	TYP.	MAX.	UNIT	REMARKS
Video	1	YNR switch	V_1	—	—	—	V	NR off (multi on)
	2	Y_{in}	V_2	1.10	1.30	1.50		—
	3	Maximum black detection	V_3	—	—	—		—
Sync	4	50 / 60Hz output	V_4	0	0.02	0.10		Low level
	5	$\overline{VD}$ output	V_5	4.50	4.95	5.00		High level
	6	HD output	V_6	0	0.15	0.30		Low level
	7	CP / SP output	V_7	0	0.17	0.30		Low level
	8	$\overline{HVD}$ output	V_8	4.00	4.24	4.50		High level
	9	Def. GND	V_9	—	—	—		—
	10	Vertical sync separation filter	V_{10}	—	—	—		—
	11	$32f_H$ VCO	V_{11}	2.80	3.10	3.40		—
	12	AFC filter	V_{12}	—	—	—		—
	13	Sync separation input	V_{13}	1.50	1.77	2.10		—
	14	Def V_{CC}	V_{14}	—	5.00	—		—
Chroma	15	M3 (mode switch 3)	V_{15}	—	—	—		—
	16	3.58 / M / N VCXO	V_{16}	3.70	4.04	4.30		Forced 3.58 mode
	17	NTSC ID	V_{17}	—	—	—		Forced NTSC mode
	18	4.43MHz VCXO	V_{18}	3.70	4.03	4.30		Forced 4.43 mode
	19	Tint	V_{19}	—	2.50	—		—
	20	PAL ID	V_{20}	—	—	—		Forced PAL mode
	21	Chroma input	V_{21}	4.10	4.30	4.50		—
	22	SECAM ID switch	V_{22}	—	5.00	—		—
	23	Chroma GND	V_{23}	—	—	—		—
	24	SECAM input	V_{24}	4.10	4.32	4.50		—
	25	ACC filter	V_{25}	—	—	—		—
	26	SECAM ID detector	V_{26}	—	—	—		—
	27	APC filter	V_{27}	—	—	—		—
	28	1H delay line output	V_{28}	3.20	3.50	3.80		—
	29	SECAM ID	V_{29}	—	—	—		Forced SECAM mode

CIRCUIT TYPE	PIN No.	PIN NAME	SYMBOL	MIN.	TYP.	MAX.	UNIT	REMARKS
Chroma	30	1H delay line input	V_{30}	1.80	2.09	2.40	V	—
	31	M1 (mode switch 1)	V_{31}	—	—	—		—
	32	B-Y detection 1	V_{32}	0.90	1.22	1.50		—
	33	B-Y detection 2	V_{33}	0.90	1.22	1.50		—
	34	Color	V_{34}	—	2.50	—		—
	35	Chroma V_{CC}	V_{35}	—	5.00	—		—
	36	R-Y detection 1	V_{36}	0.90	1.22	1.50		—
	37	R-Y detection 2	V_{37}	0.90	1.22	1.50		—
	38	M2 (mode switch 2)	V_{38}	—	—	—		—
	39	B-Y de-emphasis	V_{39}	1.70	1.95	2.20		S-ID high level
	40	M4 (mode switch 4)	V_{40}	—	—	—		—
	41	R-Y de-emphasis	V_{41}	1.70	1.95	2.20		S-ID high level
	42	SYS SW (system switch)	V_{42}	—	—	—		—
	43	B output	V_{43}	0.80	0.95	1.20		—
	44	G output	V_{44}	0.80	0.99	1.20		—
	45	R output	V_{45}	0.80	0.96	1.20		—
	46	Clamp filter	V_{46}	—	—	—		—
Video	47	PIP switch	V_{47}	—	5.00	—		—
	48	V_{ref} filter	V_{48}	1.70	1.88	2.10		—
	49	γ correction 1	V_{49}	0.80	0.95	1.10		—
	50	Brightness filter	V_{50}	3.60	3.79	4.00		—
	51	γ correction 2	V_{51}	1.20	1.38	1.60		—
	52	Brightness	V_{52}	0.80	0.95	1.10		—
	53	Video GND	V_{53}	—	—	—		—
	54	Dynamic γ filter	V_{54}	4.50	4.97	5.00		—
	55	Contrast	V_{55}	—	2.50	—		—
	56	Video V_{CC}	V_{56}	—	5.00	—		—
	57	Sharpness	V_{57}	—	2.50	—		—
	58	YH input	V_{58}	1.10	1.28	1.50		—
	59	Black stretch point	V_{59}	—	—	—		—
	60	DC transfer correction	V_{60}	—	—	—		—

(Note) Unless otherwise specified, Y and C are not input during DC measurement.

AC Characteristics (Unless otherwise specified, $V_{CC} = 5V$, Ta = 25°C)
Video Block

No.	PARAMETER	SYMBOL	UNIT	MIN.	TYP.	MAX.	TEST CONDITIONS : $V_{CC} = 5V$, Ta = 25 ± 3°C								TEST METHOD
							SW No. AND VR (VARIABLE RESISTOR) MODE								
							SW_1	SW_3	SW_{51}	SW_{54}	SW_{60}	CON-TRAST	BRIGHT-NESS	SHARP-NESS	
V_1	Second-order differential input dynamic range	V_{dip}	V	0.13	0.18	0.35	OFF	OFF	OFF	OFF	OFF	Center	Adjust	Center	1. Adjust the bright VR so that the pin 44 DC voltage is 0.95V. 2. Measure the DC voltage V_{50} of pin 50. 3. Apply the DC voltage V_{50} to pin 50. 4. Change the DC voltage V_{58} of pin 58. Measure V_{58} at 10% and 90% of the voltage variation range of pin 44 and calculate the balance (Vdip). 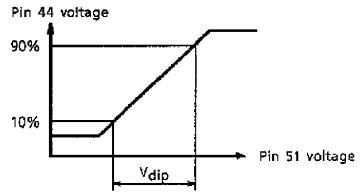
V_2	Minimum output	V_{do1}	V	0.55	0.75	0.95	OFF	OFF	OFF	OFF	OFF	Center	Adjust	Center	1. To pin 2, input a signal with a video component amplitude of $50mV_{p-p}$ and a three-level chroma signal with a sync amplitude of $143mV_{p-p}$. 2. Set the chroma amplitude of the three-level chroma signal to the minimum and adjust the bright VR so that the pin 44 pedestal is 0.95V. 3. Gradually amplify the chroma amplitude of the three-level chroma signal. Measure the saturation voltage when the lower side of the chroma amplitude in the pin 44 output waveform is saturated.
V_3	Maximum output	V_{do2}	V	1.60	1.75	2.25	OFF	OFF	OFF	OFF	OFF	Center	Adjust	Center	1. To pin 2, input a signal with a video component amplitude of $50mV_{p-p}$ and a sine wave (f = 100kHz) with a sync amplitude of $143mV_{p-p}$. 2. Adjust the bright VR so that the pin 44 pedestal is 0.95V. 3. Gradually increase the video component amplitude. Measure the saturation voltage when the upper side of the video component amplitude in the pin 44 output waveform is saturated.

No.	PARAMETER	SYMBOL	UNIT	MIN.	TYP.	MAX.	TEST CONDITIONS : V_{CC} = 5V, Ta = 25 ± 3°C								TEST METHOD
							SW No. AND VR (VARIABLE RESISTOR) MODE								
							SW_1	SW_3	SW_{51}	SW_{54}	SW_{60}	CON-TRAST	BRIGHT-NESS	SHARP-NESS	
V_4	AC gain	G_{V1}	% IRE	1.8	2.5	3.3	OFF	OFF	ON	OFF	OFF	Center	Center	Center	1. To pin 2, input a signal with a video component amplitude of 50mV_{p-p} and a sine wave (f = 100kHz) with a sync amplitude of 143mV_{p-p}. 2. Measure the output amplitude reflected at pin 44 and calculate the ratio of the amplitude to the input. G_{V1} = output amplitude / input amplitude (←50mV_{p-p})
V_5	Frequency characteristics	f_s	MHz	2	3	—	OFF	OFF	OFF	OFF	OFF	Center	Center	Center	1. To pin 2, input a signal with a video component amplitude of 50mV_{p-p} and a sine wave (f = 100kHz) with a sync amplitude of 143mV_{p-p}. 2. Connect a 1.6V power supply to pin 51. 3. Measure the pin 44 output amplitude V_{44} (f = 100kHz). 4. Gradually increase the input frequency and measure the frequency when the pin 44 output frequency reaches 70% of V_{44} (f = 100kHz).
V_6	Sharpness Adjustment range	Gf_{ps1}	dB	10.0	14.0	—	OFF	OFF	ON	OFF	OFF	Center	Adjust	Adjust	1. To pin 2, input a signal with a video component amplitude of 50mV_{p-p} and a sine wave (f = 100kHz) with a sync amplitude of 143mV_{p-p}. 2. Adjust the bright VR so that the pin 44 pedestal is 0.95V. 3. Measure the pin 44 amplitude when the sharpness VR is at minimum (V_{44min}) and measure the pin 44 amplitude when the sharpness VR is at maximum (V_{44max}). Calculate the following equation using the result of V_{44min} and V_{44max}. $Gf_{ps1} = 20\log(V_{44max} / V_{44min})$ [dB]
V_7	Sharpness Adjustment gain	Gf_{ps2}	dB	6.0	10.0	—	OFF	OFF	ON	OFF	OFF	Center	Adjust	Maximum	1. To pin 2, input a signal with a video component amplitude of 50mV_{p-p} and a sine wave (f = 2.4MHz) with a sync amplitude of 143mV_{p-p}. 2. Adjust the bright VR so that the pin 44 pedestal is 0.95V. 3. Measure the pin 44 amplitude V_{44} (2.4MHz) and V_{44} (100kΩ) when a frequency of f = 2.4MHz and 100kHz are input respectively. Calculate the following equation using the result of V_{44} (2.4MHz) and V_{44} (100kHz). $Gf_{ps2} = 20\log(V_{44}(2.4MHz) / V_{44}(100k\Omega))$ [dB]

No.	PARAMETER	SYMBOL	UNIT	MIN.	TYP.	MAX.	TEST CONDITIONS : V_{CC} = 5V, Ta = 25 ± 3°C								TEST METHOD
							SW No. AND VR (VARIABLE RESISTOR) MODE								
							SW_1	SW_3	SW_{51}	SW_{54}	SW_{60}	CON-TRAST	BRIGHT-NESS	SHARP-NESS	
V_8	Contrast adjustment voltage adjustment	ΔV_{ct}	V	2.1	3.0	—	OFF	OFF	ON	OFF	OFF	Adjust	Adjust	Center	1. To pin 2, input a signal with a video component amplitude of 50mV_{p-p} and a sine wave (f = 100kHz) with a sync amplitude of 143mV_{p-p}. 2. Adjust the bright VR so that the pin 44 pedestal is 0.95V. 3. Measure the pin 44 amplitude and determine 100% and 0% of the pin 44 amplitude when the contrast VR is at maximum and minimum respectively. 4. Adjust the contrast VR and measure the pin 55 voltage ($V_{90\%}$, $V_{10\%}$) when the pin 44 amplitude is at 90% and 10%. Calculate the following equation using the result of $V_{90\%}$ and $V_{10\%}$. $\Delta V_{ct} = V_{90\%} - V_{10\%}$
V_9	Contrast adjustment gain variation range	ΔG_{ct}	dB	12.0	15.0	—	OFF	OFF	ON	OFF	OFF	Adjust	Adjust	Center	1. To pin 2, input a signal with a video component amplitude of 50mV_{p-p} and a sine wave (f = 100kHz) with a sync amplitude of 143mV_{p-p}. 2. Adjust the bright VR so that the pin 44 pedestal is 0.95V. 3. Measure the pin 44 amplitude when the contrast VR is at maximum and minimum respectively (V_{44max} and V_{44min}). Calculate the following equation using the result of V_{44max} and V_{44min}. $\Delta G_{ct} = 20\log (V_{44max} / V_{44min})$
V_{10}	Brightness voltage	V_{BR}	V	0.75	0.95	1.15	OFF	OFF	OFF	OFF	OFF	Center	Adjust	Center	1. To pin 2, input a signal with a video component amplitude of 50mV_{p-p} and a sine wave (f = 100kHz) with a sync amplitude of 143mV_{p-p}. 2. Adjust the bright VR so that the pin 44 pedestal is 0.95V. 3. Measure the pin 52 DC voltage.
V_{11}	Brightness control sensitivity	G_{BR}		0.4	0.5	0.6	OFF	OFF	OFF	OFF	OFF	Center	Adjust	Center	1. To pin 2, input a signal with a video component amplitude of 50mV_{p-p} and a sine wave (f = 100kHz) with a sync amplitude of 143mV_{p-p}. 2. Adjust the bright VR so that the pin 44 pedestal is 0.95V. 3. Adjust the bright VR so that the pin 52 DC voltage increases by just 0.1V, then measure the pin 44 pedestal level V_{44H}. Calculate the following equation using the result. $G_{BR} = (V_{44H} - 0.95) / 0.1$

No.	PARAMETER	SYMBOL	UNIT	MIN.	TYP.	MAX.	TEST CONDITIONS : V_{CC} = 5V, Ta = 25 ± 3°C SW No. AND VR (VARIABLE RESISTOR) MODE SW_1	SW_3	SW_{51}	SW_{54}	SW_{60}	CON-TRAST	BRIGHT-NESS	SHARP-NESS	TEST METHOD
V_{12}	Brightness Adjustment voltage range	V_{pdH}	V	1.2	1.5	1.7	OFF	OFF	OFF	OFF	OFF	Center	Adjust	Center	1. To pin 2, input a signal with a video component amplitude of 50mV_{p-p} and a sine wave (f = 100kHz) with a sync amplitude of 143mV_{p-p}. 2. Measure the pin 44 pedestal when the bright VR is at maximum (V_{pdH}). 3. Measure the pin 44 pedestal when the bright VR is at minimum (V_{pdL}).
		V_{pdL}	V	0.3	0.5	0.7									
V_{13}	Three-axis output DC offset (B / G)	ΔV_{of} (B / G)	mV	− 200	0.0	200	OFF	OFF	OFF	OFF	OFF	Center	Adjust	Center	1. To pin 2, input a signal with a video component amplitude of 50mV_{p-p} and a sine wave (f = 100kHz) with a sync amplitude of 143mV_{p-p}. 2. Adjust the bright VR so that the pin 44 pedestal is 0.95V (= V_{44}). 3. Measure the pin 43 pedestal V_{43} and the pin 45 pedestal V_{45}, then calculate the following equations using the values of V_{43} and V_{45}. ΔV_{of} (B / G) = $V_{43} - V_{44}$ ΔV_{of} (R / G) = $V_{45} - V_{44}$
	Three-axis output DC offset (R / G)	ΔV_{of} (R / G)	mV	− 200	0.0	200									
V_{14}	Three-axis output AC gain deflection (B / G)	ΔV_{dif} (B / G)	dB	− 1.0	0.0	1.0	OFF	OFF	OFF	OFF	OFF	Center	Adjust	Center	1. To pin 2, input a signal with a video component amplitude of 50mV_{p-p} and a sine wave (f = 100kHz) with a sync amplitude of 143mV_{p-p}. 2. Adjust the bright VR so that the pin 44 pedestal is 0.95V. 3. Measure the pin 43 amplitude V_{43}, the pin 44 amplitude V_{44}, and the pin 45 amplitude V_{45}, then calculate the following equations using the values of V_{43}, V_{44}, and V_{45}. ΔV_{dif} (B / G) = $20\log(V_{43}/V_{44})$ ΔV_{dif} (R / G) = $20\log(V_{45}/V_{44})$
	Three-axis output AC gain deflection (R / G)	ΔV_{dif} (R / G)	dB	− 1.0	0.0	1.0									

No.	PARAMETER	SYMBOL	UNIT	MIN.	TYP.	MAX.	TEST CONDITIONS : V_{CC}=5V, Ta=25±3°C								TEST METHOD
							SW No. AND VR (VARIABLE RESISTOR) MODE								
							SW_1	SW_3	SW_{51}	SW_{54}	SW_{60}	CON-TRAST	BRIGHT-NESS	SHARP-NESS	
V_{15}	Black stretch start voltage	V_{st}	% IRE	30	60	70	OFF	ON	ON	OFF	ON	Center	Adjust	Center	1. To pin 2, input a signal with a ramp wave amplitude of 500mV_{p-p}. The sync amplitude must be 143mV_{p-p} and the setup amplitude, 100mV_{p-p}. 2. Monitor pins 2 and 60 with an oscilloscope. Set the pin 60 monitor channel to uncarrier and adjust pins 20 and 60 so that the pedestals and white peaks of both pins overlap. 3. Compare the signals and read the voltage where the signal starts to move to the black side (=V_x [mV]) using the pedestal voltage as reference. 4. Calculate following equation to seek the start voltage V_{st}. $V_{st} = V_x / (500 - 143) \times 100$ [% IRE] 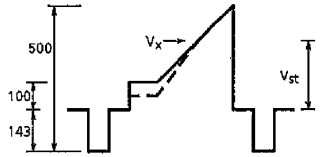
V_{16}	Black stretch gain	G_{blk}		1.1	1.3	1.5	OFF	ON	ON	OFF	ON	Center	Adjust	Center	1. To pin 2, input a sine wave (f=100kHz) with an amplitude of 50mV_{p-p} and a signal with a sync amplitude of 143mV_{p-p}. 2. Adjust the bright VR so that the pin 44 pedestal is 0.95V. 3. Apply a voltage of 0.65V to pin 3. 4. Apply a voltage of 1.6V to pin 59. 5. Monitoring pin 44, adjust only the signal generator sine wave amplitude so that the sine wave amplitude is 25mV_{p-p}. 6. Turn SW_3 off. Now read the pin 44 amplitude (=V_{off} [mV_{p-p}]) 7. Calculate the following equation to seek the black stretch gain. $G_{blk} = V_{off} / 25$ [times]

No.	PARAMETER	SYMBOL	UNIT	MIN.	TYP.	MAX.	TEST CONDITIONS : V_{CC} = 5V, Ta = 25 ± 3°C								TEST METHOD
							SW No. AND VR (VARIABLE RESISTOR) MODE								
							SW_1	SW_3	SW_{51}	SW_{54}	SW_{60}	CON-TRAST	BRIGHT-NESS	SHARP-NESS	
V_{17}	DC transfer correction	V_{dct}	%	93	98	100	OFF	OFF	ON	OFF	OFF	Center	Minimum	Center	1. To pin 2, input a ramp wave with an amplitude of 500mV_{p-p}. The sync amplitude in the ramp wave must be 143mV_{p-p}. 2. Read the pin 44 output amplitude (= $V_{dct\ off}$). 3. Turn SW_{60} on and read the voltage fluctuation (= ΔV_{dct}) during the horizontal blanking period of the output amplitude of pin 44. 4. Calculate the DC transfer correction using the following equation. $V_{dct} = \frac{(V_{dct\ off} - \Delta V_{dct})}{V_{dct\ off}} \times 100\ (\%)$

Chroma Block

No.	PARAMETER	SYMBOL	UNIT	MIN.	TYP.	MAX.	TEST CONDITIONS : V_{CC} = 5V, Ta = 25 ± 3°C SW No. AND VR MODE 15	16	18	19	21	24	31	34	38	47	55	TEST METHOD
C_1	ACC characteristics (3N)	B-Y OUT1 A3N	V_{p-p}	0.60 0.70	0.80 1.00	1.00 1.30	Open	A	A	ON Vary	A	B	Open	Open	Open	ON	—	1. Define as e_{B-Y} the B-Y output amplitude of pin 43 when the burst and chroma signals, which have the same amplitude of 10mV$_{p-p}$, are input to pin 21. Also define the B-Y output amplitude of pin 43 when the burst and chroma signals have the same amplitude of 100 and 300mV$_{p-p}$ (the 3N rainbow color-bar signal) and are input to pin 21 as B-Y OUT1 and B-Y OUT2 respectively. Also, define the ratio between B-Y OUT1 and B-Y OUT2 as A. 2. Using tint control, set the B-Y output amplitude to the maximum. A = B-Y OUT1 / B-Y OUT2 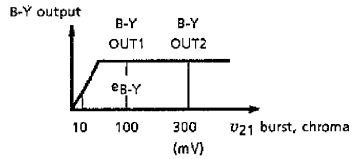
C_2	Delay line output (PAL)	e_{P28}	V_{p-p}	0.90	1.20	1.50	Open	A	A	ON Vary	A	B	Open	Open	Open	ON	—	1. Measure the pin 28 1H output amplitude when burst and chroma signals with the same amplitude of 100mV$_{p-p}$ (PAL rainbow color bar signal) are input to pin 21. 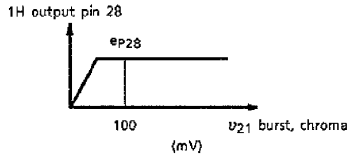
		V_{P28} V_{N28}	V V	2.30 3.30	2.60 3.60	2.90 3.90	A	A	A	—	C	B	A/B	—	Open	ON	—	2. Measure the pin 28 DC voltage when there is no input to pin 21 and Forced PAL or NTSC mode is set. Define these voltages as V_{P28} and V_{N28} respectively (PAL/NTSC switching operation check).

No.	PARAMETER	SYMBOL	UNIT	MIN.	TYP.	MAX.	TEST CONDITIONS : V_{CC} = 5V, Ta = 25 ± 3°C											TEST METHOD
							SW No. AND VR MODE											
							15	16	18	19	21	24	31	34	38	47	55	
C3	Tint control range (3N / 4N)	ΔV_{19N3} ΔV_{19N4}	V	— —	4.00 4.00	— —	Open	A	A	ON Vary	A	B	Open	ON Arbi-trary	Open	ON	—	1. To pin 21, input burst and chroma signals with the same amplitude of (100mV_{p-p}). (3NTSC / 4NTSC) 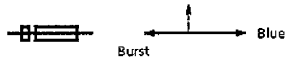
C4	Tint control voltage (3N / 4N)	V_{19N3} V_{19N4}	V	— —	2.50 2.50	— —	Open	A	A	ON Vary	A	B	Open	ON Arbi-trary	Open	ON	—	2. Vary the pin 19 tint control, defining the point where the pin 43 B-Y output amplitude is at maximum as the tint center state. Vary the tint VR between maximum and minimum and plot the tint VR phase characteristics. 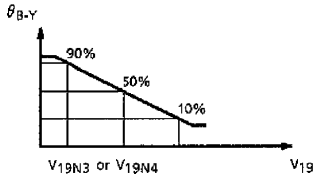
C5	Tint control variable range (3N / 4N)	θ_{3N} θ_{4N}	°	— —	90.0 90.0	— —	Open	A	A	ON Vary	A	B	Open	ON Arbi-trary	Open	ON	—	
C6	Tint control discrimination	θ_{+3N} θ_{-3N} θ_{+4N} θ_{-4N}	°	— — — —	+45.0 −45.0 +45.0 −45.0	— — — —	Open	A	A	ON Vary	A	B	Open	ON Arbi-trary	Open	ON	—	3. The color control VR position can be set to any point out of color saturation range. Tint control range = θ_{B-Y} (90% to 10%) Tint control voltage = Tint center state

No.	PARAMETER	SYMBOL	UNIT	MIN.	TYP.	MAX.	TEST CONDITIONS : V_{CC} = 5V, Ta = 25 ± 3°C											TEST METHOD
							SW No. AND VR MODE											
							15	16	18	19	21	24	31	34	38	47	55	
C7	Killer operating input level (P/3N)	e_{PK} e_{PC} e_{NK} e_{NC}	mV_{p-p}	0.60 0.60 0.40 0.40	1.00 2.50 0.70 1.80	1.70 4.30 1.30 3.10	Open	A	A	—	A	B	Open	—	Open	ON	—	1. Measure the pin 28 1H output amplitude when burst and chroma signals with the same amplitude of $100mV_{p-p}$ (PAL rainbow color bar signal) are input to pin 21. 2. Attenuate the signal to pin 21 with an attenuator and read the pin 21 burst level where the killer function turns on and off. 3. 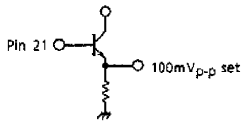 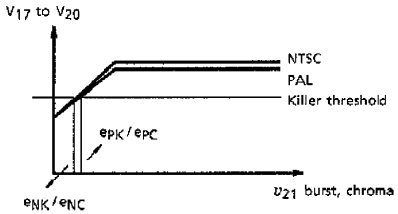

No.	PARAMETER	SYMBOL	UNIT	MIN.	TYP.	MAX.	TEST CONDITIONS : V_{CC} = 5V, Ta = 25 ± 3°C											TEST METHOD
							SW No. AND VR MODE											
							15	16	18	19	21	24	31	34	38	47	55	
C8	Killer operating voltage (P/3N/black & white mode)	PC PI ΔPI NC NI ΔNI	V V mV V V mV	— — — — — —	2.60 2.08 520 2.60 2.08 520	— — — — — —	Open	A	A	—	A	B	Open	—	Open	ON	—	1. No signal is input to pin 21. 2. Check the DC voltage of pin 20 (PAL ID) and pin 17 (NTSC ID). Define these as PI and NI respectively. 3. Externally vary the voltage applied to pins 20 and 17. Define the ID voltages for PAL color and NTSC color as PC and NC respectively. 4. Define the difference between the ID voltages in the above no-signal state and the ID voltages in the forced color state as ΔPI and ΔNI respectively. 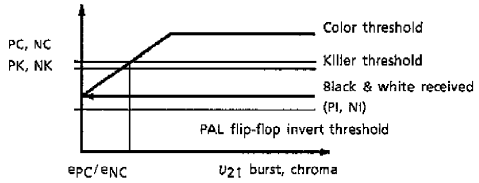
C9	APC pull-in hold range (3N/4N)	f3HH f3PH f3HL f3PL f4HH f4PH f4HL f4PL	Hz	+400 +400 −400 −400 +400 +400 −400 −400	+600 +600 −600 −600 +600 +600 −600 −600	+1000 +1000 −1000 −1000 +1000 +1000 −1000 −1000	Select	A	A	—	A	B	Select	—	Select	—	—	1. To pin 21, input a 3.58MHz/4.4MHz continuous wave with an amplitude of 100mV$_{p-p}$. 3.58MHz/4.4MHz continuous wave 2. Vary the above input frequency. Using the held pull-in frequency, compare to 3N and 4N and measure. 3N Ref 3579545Hz 4N Ref 4433618Hz 3. Measure in 3N and 4N Forced modes.

No.	PARAMETER	SYMBOL	UNIT	MIN.	TYP.	MAX.	TEST CONDITIONS : V_{CC} = 5V, Ta = 25 ± 3°C SW No. AND VR MODE 15	16	18	19	21	24	31	34	38	47	55	TEST METHOD
C_{10}	VCXO adjustment sensitivity (3N / 4N)	β_{3N} β_{4N}	Hz / mV	— —	1.00 1.00	— —	Open	B / A	A / B	—	C	B	Open	—	B / A	—	—	1. No signal is input to pin 21. 2. Fix the 3N / 4N X'tal oscillation externally. 3. Apply external DC voltage to pin 27 (APC filter) and check the free-running frequency. 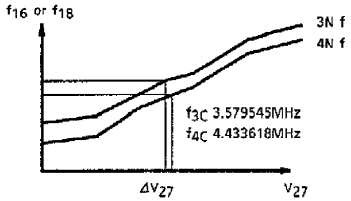 $\Delta V_{27}^{\beta} = f_C \pm 25mV$ f_O sensitivity
C_{11}	Color difference output (PAL / 3N)	eP43 eP44 eP45 e3N43 e3N44 e3N45	V_{p-p}	0.60 0.21 0.35 0.66 0.22 0.39	0.91 0.31 0.51 1.00 0.33 0.57	1.30 0.43 0.70 1.43 0.46 0.78	Open	A	A	ON Vary	A	B	Open	Open	Open	OFF	Open	1. Input burst and chroma signals with the same amplitude of 100mV$_{p-p}$ (rainbow color bar signal) to pin 21 (PAL / 3NTSC). 2. Measure the B / G / R-Y color difference amplitudes for pins 43, 44, and 45. 3. Check the color difference amplitudes of each pin. Calculate the R-Y / B-Y and G-Y / B-Y amplitude ratios. (Note) In PAL mode, adjust the delay line using a Philips pattern signal. Measure the PAL color difference output using the PAL rainbow signal in the video input.
C_{12}	Relative amplitude (PAL / 3N)	PR / PB PG / PB NR / NB NG / NB	—	0.46 0.24 0.46 0.24	0.56 0.34 0.56 0.34	0.66 0.44 0.66 0.44												

No.	PARAMETER	SYMBOL	UNIT	MIN.	TYP.	MAX.	TEST CONDITIONS : V_{CC} = 5V, Ta = 25 ± 3°C											TEST METHOD
							SW No. AND VR MODE											
							15	16	18	19	21	24	31	34	38	47	55	
C_{13}	Relative phase (PAL / 3N)	pr / pb pg / pb nr / nb ng / nb	°	83.0 232.0 87.0 225.0	90.0 237.0 94.0 240.0	97.0 247.0 101.0 255.0	Open	A	A	—	A	B	Open	Open	Open	OFF	Open	1. To pin 21, input burst and chroma signals with the same amplitude of 100mV_{p-p} (monochromatic, blue). 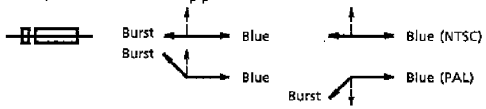 2. Vary the phase of the above monochromatic color and seek the monochromatic input phase where the B-Y output amplitude of pin 43 reaches 0 (θ_{B-Y}). 3. Vary the phase of the above monochromatic color and seek the monochromatic input phase where the G-Y output amplitude of pin 44 reaches 0 (θ_{G-Y}). 4. Vary the phase of the above monochromatic color and seek the monochromatic input phase where the R-Y output amplitude of pin 45 reaches 0 (θ_{R-Y}). Also, in PAL mode, adjust the delay line using a Philips pattern signal with the IC mounted in the set and check the phase in the video input using either a PAL or 3N rainbow signal. (θ_{G-Y}) − (θ_{B-Y}) = pg / pb, ng / nb (θ_{R-Y}) − (θ_{B-Y}) = pr / pb, nr / nb

No.	PARAMETER	SYMBOL	UNIT	MIN.	TYP.	MAX.	TEST CONDITIONS : V_{CC} = 5V, Ta = 25 ± 3°C SW No. AND VR MODE 15	16	18	19	21	24	31	34	38	47	55	TEST METHOD
C_{14}	SECAM limiter characteristics	e_{24} As	mV_{p-p}	20.0 0.70	30.0 1.00	44.0 1.30	Open	A	A	—	C	A 24A A Sig ON	Open	Open	Open	—	—	1. To pin 24, input a 4.44MHz continuous wave with an amplitude of 10 to 500mV_{p-p}. 44-MHz continuous wave 2. Measure the input / output characteristics between the pin 28 1H output and the pin 24 input. 3. Define as e_{24} the input amplitude where −3dB is subtracted from the pin 28 1H output amplitude and pin 24 inputs a continuous wave amplitude of 100mV_{p-p}. Also, define the 100 / 300mV_{p-p} output amplitude ratio. 4. Measure the pin 28 output amplitude when pin 24 inputs a continuous wave amplitude of 100mV_{p-p}. Define the amplitude as e_{28}.
C_{15}	Delay line output (SECAM)	e_{28}	V_{p-p}	—	1.80	—												

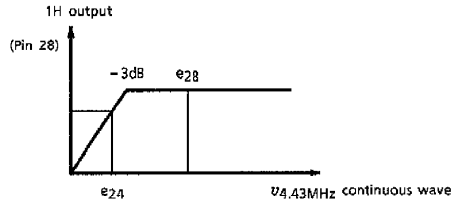

No.	PARAMETER	SYMBOL	UNIT	MIN.	TYP.	MAX.	TEST CONDITIONS : V_{CC} = 5V, Ta = 25 ± 3°C SW No. AND VR MODE 15	16	18	19	21	24	31	34	38	47	55	TEST METHOD
C_{16}	Killer operation input level	e_{SK} e_{SC}	mV_{p-p}	— —	2.80 2.80	— —	Open	A	A	—	C	A 24A A Sig ON	Open	Open	Open	—	—	1. To pin 24, input a f_{OB}/f_{OR} signal with an amplitude of $100mV_{p-p}$. 2. Attenuate the input signal with an attenuator and detect the achromatic level. Define the pin 24 input levels where the killer operation turns on and off. 3. 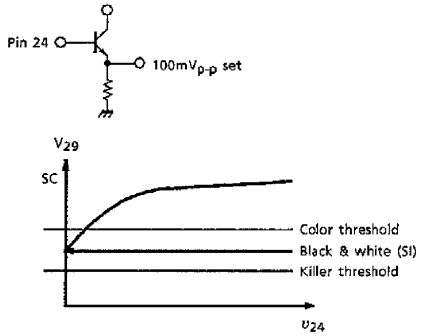
C_{17}	Killer operation voltage	SC SI ΔSI	V V mV	— — —	2.60 2.08 520	— — —	Open	A	A	—	C	B	Open	Open	Open	—	—	1. No signal is input to pin 24. 2. Measure the DC voltage of pin 29 (SECAM ID) and define as SI. 3. Vary the external voltage applied to pin 29. Define the ID voltage for SECAM color as SC. 4. Define the difference between the ID voltages in the above modes as ΔSI (SC-SI).
C_{18}	SECAM ID switch (V-ID on)	V_{29}	V	—	2.30	—	Open	A	A	—	C	A 24A A Sig ON	Open	OFF	Open	—	—	1. To pin 24, input a f_{OB}/f_{OR} signal with an amplitude of $100mV_{p-p}$. 2. Attenuate the input signal with an attenuator and detect the achromatic level. Define the pin 24 input levels where the killer operation turns on and off. (Check the killer operation by turning the SECAM ID switch on and off.) Define the switching SECAM ID voltage as V_{29}.

No.	PARAMETER	SYMBOL	UNIT	MIN.	TYP.	MAX.	TEST CONDITIONS : V_{CC} = 5V, Ta = 25 ± 3°C SW No. AND VR MODE 15	16	18	19	21	24	31	34	38	47	55	TEST METHOD
C_{19}	SECAM color difference output	e_{S43} e_{S44} e_{S45}	mV_{p-p}	— —	2.80 2.80	— —	Open	A	A	—	C	A	Open	Open	Open	—	—	1. To pin 24, input a 75% standard color bar signal with an amplitude of $300mV_{p-p}$. 2. Measure the color difference levels of pins 43, 44, and 45.
C_{20}	SECAM demodulation bandwidth	#43R BAND #45B BAND	MHz	0.80 0.80	1.15 1.15	— —	A	A	A	—	C	C	A	OFF	Open	ON	OFF	1. To pin 24, input FM 100kHz, 100dBμV, fm 1kHz / div signal. 2. When measuring the R-Y and B-Y signals, vary the f_{OR} = 4.406MHz and f_{OB} = 4.25MHz signals respectively and measure the −3dB bandwidth in the color difference output. Also measure the relative amplitudes of V_{45} and V_{43} when f_{OR} is 4.406MHz and f_{OB} is 4.25MHz. 3. No horizontal pulse.
C_{21}	SECAM relative amplitude	SR / SB SG / SB										C / A 24A A Sig ON	A / Open	OFF	ON	OFF	—	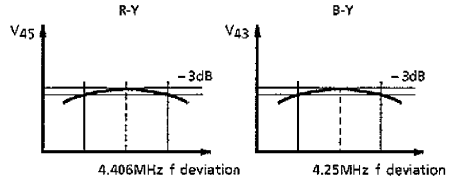
C_{22}	SECAM crosstalk	e_{SR} e_R RC e_{SB} e_B BC	V_{p-p} mV_{p-p} dB V_{p-p} mV_{p-p} dB	— — 30.0 — — 30.0	1.00 20 34 1.40 30 33	— — — — — —	Open	A	A	—	C	A	Open	Open	Open	ON	OFF	1. To pin 24, input a 75% standard color bar signal with an amplitude of $300mV_{p-p}$. 2. Measure the pin 43 B-Y and the pin 45 R-Y output color difference amplitudes. Also measure the f_{OR} and f_{OB} 160kHz beat frequency amplitudes. 3. Show the SECAM crosstalk as follows. Attenuation = $20\log(e_R / e_{SR})$ = RC 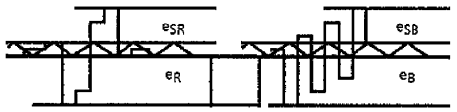

No.	PARAMETER	SYMBOL	UNIT	MIN.	TYP.	MAX.	TEST CONDITIONS : V_{CC} = 5V, Ta = 25 ± 3°C											TEST METHOD
							SW No. AND VR MODE											
							15	16	18	19	21	24	31	34	38	47	55	
C_{23}	M1 output voltage of interface pin 31	V_{S1}	V	—	3.00	—	Open	A	A	Open	A	A	Open	Open	Open	OFF	Open	Input to pin 21 (PAL/NTSC) the PAL, 3N, 4N signals and to pin 24 (SECAM) SECAM and black & white signals and measure the M1, M2, and M3 voltages at each signal input state. PAL & SECAM modes
				—	0	—												Input to pin 21 (PAL/NTSC) the PAL, 3N, 4N signals and to pin 24 (SECAM) SECAM and black & white signals and measure the M1, M2, and M3 voltages at each signal input state. 4.43MHz NTSC, 3.58MHz NTSC, black & white 1, black & white 2 modes
C_{24}	M2 output voltage of interface pin 38	V_{S2}	V	—	3.00	—	Open	A	A	Open	A	A	Open	Open	Open	OFF	Open	Input to pin 21 (PAL/NTSC) the PAL, 3N, 4N signals and to pin 24 (SECAM) SECAM and black & white signals and measure the M1, M2, and M3 voltages at each signal input state. PAL & 4.43MHz NTSC modes
				—	1.50	—												Input to pin 21 (PAL/NTSC) the PAL, 3N, 4N signals and to pin 24 (SECAM) SECAM and black & white signals and measure the M1, M2, and M3 voltages at each signal input state. SECAM, black & white 1 modes
				—	0	—												Input to pin 21 (PAL/NTSC) the PAL, 3N, 4N signals and to pin 24 (SECAM) SECAM and black & white signals and measure the M1, M2, and M3 voltages at each signal input state. 3.58MHz NTSC, black & white 2 modes

No.	PARAMETER	SYMBOL	UNIT	MIN.	TYP.	MAX.	TEST CONDITIONS : V_{CC} = 5V, Ta = 25 ± 3°C											TEST METHOD
							SW No. AND VR MODE											
							15	16	18	19	21	24	31	34	38	47	55	
C_{25}	M3 output voltage of interface pin 15	V_{S3}	V	—	1.50	—	Open	A	A	Open	A	A	Open	Open	Open	OFF	Open	Input to pin 21 (PAL/NTSC) the PAL, 3N, 4N signals and to pin 24 (SECAM) SECAM and black & white signals and measure the M1, M2, and M3 voltages at each signal input state. PAL/SECAM, 4.43MHz NTSC, and 3.58MHz NTSC modes
				—	0	—												Input to pin 21 (PAL/NTSC) the PAL, 3N, 4N signals and to pin 24 (SECAM) SECAM and black & white signals and measure the M1, M2, and M3 voltages at each signal input state. Black & white 1, black & white 2 modes * Note that black & white 1 mode is 4.43MHz chroma VCO oscillation and black & white 2 mode is 3.58MHz chroma VCO oscillation.
C_{26}	Switch threshold current	I_{S1}	mA	—	0.55	—	Open	A	A	Open	C	B	Open	Open	Open	OFF	Open	1. Input either PAL or SECAM signal. 2. Input external current to pin 15 and measure the current when mode changes to black & white.
C_{27}	Switch threshold current	I_{S2}	mA	—	0.58	—	Open	A	A	Open	C	B	Open	Open	Open	OFF	Open	1. Input SECAM signal. 2. Input external current to pin 38 and measure the current when mode changes to black & white.
C_{28}	PIP switch check	UV SP	V	— —	1.50 3.00	— —	Open	A	A	Open	A	A	Open	Open	Open	—	Open	1. To pin 24, input a 75% standard color bar signal with an amplitude of 100mV$_{p-p}$ (PAL/NTSC). 2. Apply external voltage to pin 47 (PIP switch) and measure the pin 47 voltage when pin 43 switches between primary color and color difference states.

No.	PARAMETER	SYMBOL	UNIT	MIN.	TYP.	MAX.	TEST CONDITIONS : V_{CC} = 5V, Ta = 25 ± 3°C											TEST METHOD
							SW No. AND VR MODE											
							15	16	18	19	21	24	31	34	38	47	55	
C29	PAL ID malfunction check	V_{20P} V_{20N3} V_{20N4} V_{20S} V_{20BW}	V	—	4.20 2.00 2.00 2.00 2.00	—	Open	A	A	Open	A	A	Open	Open	Open	OFF	Open	1. Input the signals corresponding to each mode to pins 21 (PAL/NTSC) and 24 (SECAM) (75% standard color bar signal). 2. Measure the N/P/S ID DC voltage on pins 17, 20, and 29. P : Philips pattern signal N3 : 3.58N 75% standard color bar signal N4 : 4.43N 75% standard color bar signal S : SECAM 75% standard color bar signal Black & white : RETMA signal (Note) When measuring the filtered voltage, measure at high impedance (at least 10MΩ or higher).
C30	NTSC ID malfunction check	V_{17P} V_{17N3} V_{17N4} V_{17S} V_{17BW}	V	—	4.20 2.00 2.00 2.00 2.00	—	Open	A	A	Open	A	A	Open	Open	Open	OFF	Open	
C31	SECAM ID malfunction check	V_{29P} V_{29N3} V_{29N4} V_{29S} V_{29BW}	V	—	2.25 2.10 2.10 3.90 2.15	—	Open	A	A	Open	A	A	Open	Open	Open	OFF	Open	
C32	Color control adjustment range	ΔV_{34}	V	—	3.50	—	Open	A	A	Open	A	B	Open	Adjust	Open	OFF	Open	1. To pin 21, input burst and chroma signals with the same amplitude (100mV_{p-p}) (rainbow color bar signal). 2. While measuring the pin 43 B-Y, adjust so that the 6 bar reaches the peak using the tint control VR. Vary the color control VR under the above conditions and define the color control pin voltage as V_{34} where the B-Y output amplitude halves. Also, where the B-Y output amplitudes are 90% and 10%, define the color control pin voltages as V_{34A} and V_{34B} respectively. And define the voltage difference between V_{34A} and V_{34B} as ΔV_{34}, the color control range. $\Delta V_{34} = V_{34A} - V_{34B}$ 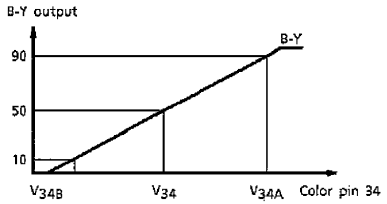
C33	Color control adjustment voltage	V_{34}	V	—	2.50	—	Open	A	A	Open	A	B	Open	Adjust	Open	OFF	Open	

Sync Block

No.	PARAMETER	SYMBOL	UNIT	MIN.	TYP.	MAX.	TEST CONDITIONS : V_{CC} = 5V, Ta = 25 ± 3°C SW AND VR MODE					TEST METHOD
							SW_{10}	SW_{12}	SW_{13}	SW_{47}		
D_1	Horizontal oscillation frequency	f_H	V	15.584	15.734	15.884	—	—	OFF	—	—	Measure the frequency of pin 6.
D_2	Horizontal frequency variable range	f_{Hmax}	kHz	16.384	16.484	—	—	ON	OFF	—	—	1. Connect a variable voltage supply V_{AFC} to pin 12. 2. Vary the V_{AFC} between 2 and 5V and measure the maximum and minimum frequency of pin 6 during the variation.
		f_{Hmin}		—	14.984	15.084						
D_3	Horizontal oscillation control sensitivity	β_H	Hz / mV	7.0	10.0	13.0	—	ON	OFF	—	—	1. Connect a variable voltage supply V_{AFC} to pin 12. 2. Measure the pin 6 frequency f (3V) when V_{AFC} is 3V and measure the pin 6 frequency f (4V) when V_{AFC} is 4V. 3. $\beta_H = (f_{(4V)} - f_{(3V)} / 1000)$ [Hz / mV]
D_4	Horizontal oscillation start voltage	V_{ON1}	V	—	2.8	3.3	—	—	—	—	Do not connect a 5V power supply (V_{CC}).	1. To pin 14, connect a variable voltage supply V_{CC}'. 2. Increase the V_{CC}' voltage and measure the pin 14 voltage when pin 11 generates an oscillation waveform.
D_5	Horizontal output start voltage	V_{ON2}	V	—	2.8	3.3	—	—		—	Do not connect a 5V power supply (V_{CC}).	1. To pin 14, connect a variable voltage supply V_{CC}'. 2. Increase the V_{CC}' voltage and measure the pin 14 voltage when pin 6 has horizontal output.
D_6	Horizontal output pulse width	W_H	μs	4.7	5.0	5.3	ON	ON	ON	—	—	1. To pin 13, input a 300mV_{p-p} horizontal sync signal via a 1μF capacitor. 2. Observe the waveform on pin 6. 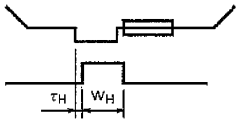
D_7	Horizontal output pulse delay	τ_H	μs	0.30	0.45	0.65						
D_8	Horizontal output saturation level	V_{HS}	V	—	0.2	0.4	—	—	—	—	—	1. Observe the pin 6 waveform and read the lowest voltage.

No.	PARAMETER	SYMBOL	UNIT	MIN.	TYP.	MAX.	TEST CONDITIONS : V_{CC} = 5V, Ta = 25 ± 3°C					TEST METHOD
							SW AND VR MODE					
							SW_{10}	SW_{12}	SW_{13}	SW_{47}		
D_9	PAL / NTSC gate pulse phase	T_{PN1}	μs	—	0.6	—	ON	ON	ON	—	—	1. Connect an additional 20kΩ resistor between pin 17 and V_{CC}. 2. To pin 13, input a 300mV$_{p-p}$ composite sync signal via a 1μF capacitor. 3. Observe the waveform on pin 17. 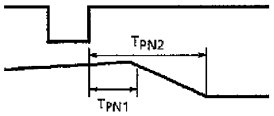
		T_{PN2}	μs	—	3.1	—						
D_{10}	SECAM gate pulse phase	T_{S1}	μs	—	3.1	—	ON	ON	ON	—	—	1. Connect an additional 20kΩ resistor between pin 29 and V_{CC}. 2. To pin 13, input a 300mV$_{p-p}$ composite sync signal via a 1μF capacitor. 3. Observe the waveform on pin 29. 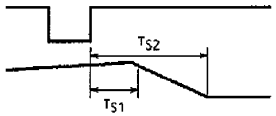
		T_{S2}	μs	—	4.8	—						
D_{11}	Vertical output pulse phase	WV	H	—	2.75	—	ON	ON	ON	—	—	1. To pin 13, input a 300mV$_{p-p}$ composite sync signal via a 1μF capacitor. 2. Observe the waveform on pin 5. 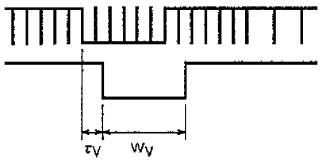
		τV	H	0	—	1.5						

No.	PARAMETER	SYMBOL	UNIT	MIN.	TYP.	MAX.	TEST CONDITIONS : V_{CC} = 5V, Ta = 25 ± 3°C					TEST METHOD
							SW AND VR MODE					
							SW_{10}	SW_{12}	SW_{13}	SW_{47}		
D_{12}	Vertical sync lock-in range	V_{PH}	H	—	345	—	ON	ON	ON	—	—	1. To pin 13, input a 300mV_{p-p} composite sync signal via a 1μF capacitor. 2. Vary the vertical sync of the composite sync signal. 3. Measure the vertical sync where the vertical sync input and the pin 5 output synchronize.
		V_{PL}		—	228	—						
D_{13}	60Hz vertical sync range	V_{6H}	H	—	287	—	ON	ON	ON	—	—	1. To pin 13, input a 300mV_{p-p} composite sync signal via a 1μF capacitor. 2. Vary the vertical sync of the composite sync signal. 3. Measure the vertical sync where the vertical sync input and the pin 5 output synchronize and pin 4 output is high.
		V_{6L}		—	228	—						

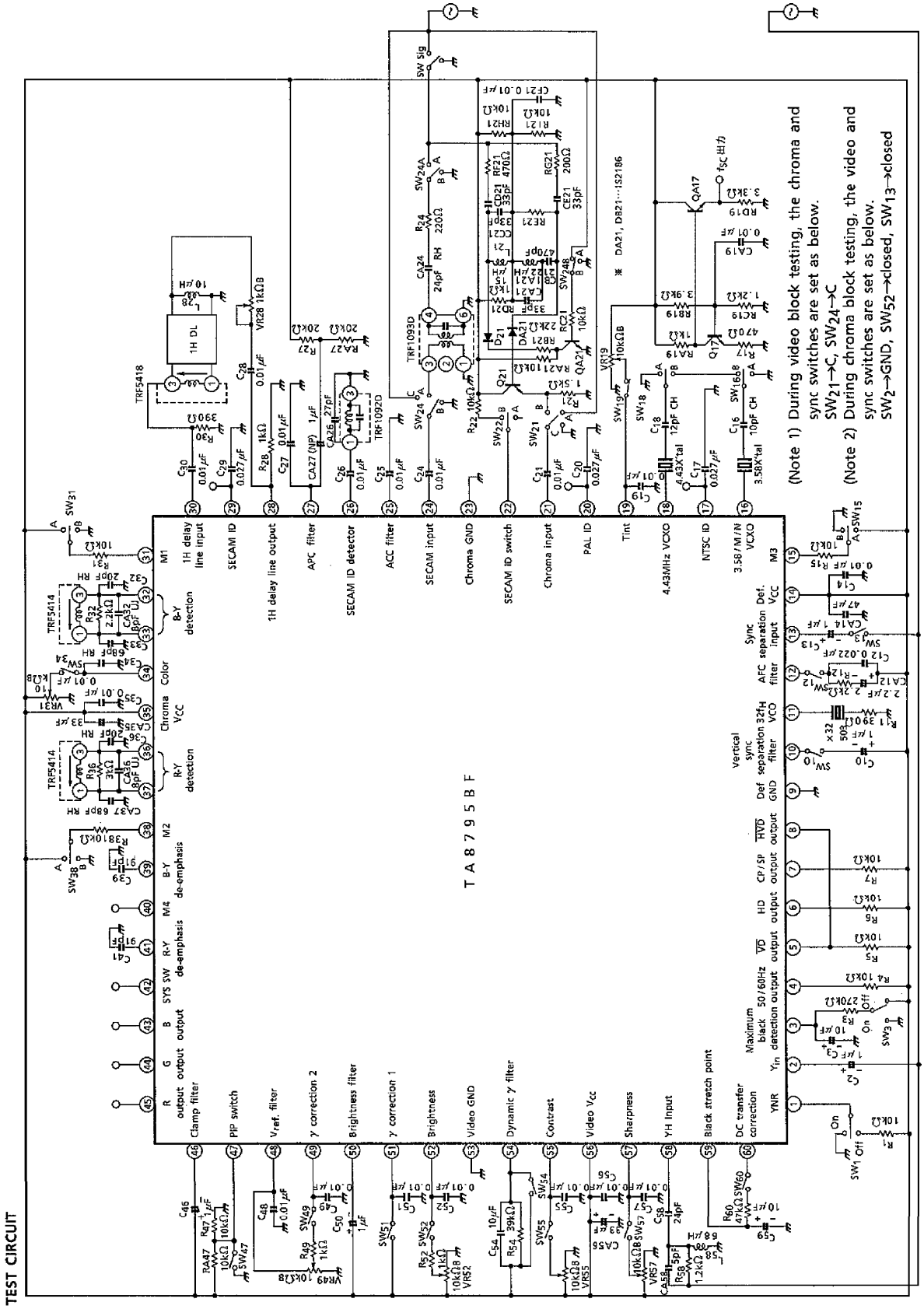
TEST CIRCUIT
TA8795BF
(Note 1) During video block testing, the chroma and sync switches are set as below.
SW21→C, SW24→C
(Note 2) During chroma block testing, the video and sync switches are set as below.
SW2→GND, SW52→closed, SW13→closed
TA8795BF – 40

APPLICATION CIRCUIT EXAMPLE 1 Normal Mode

(Auto Mode)

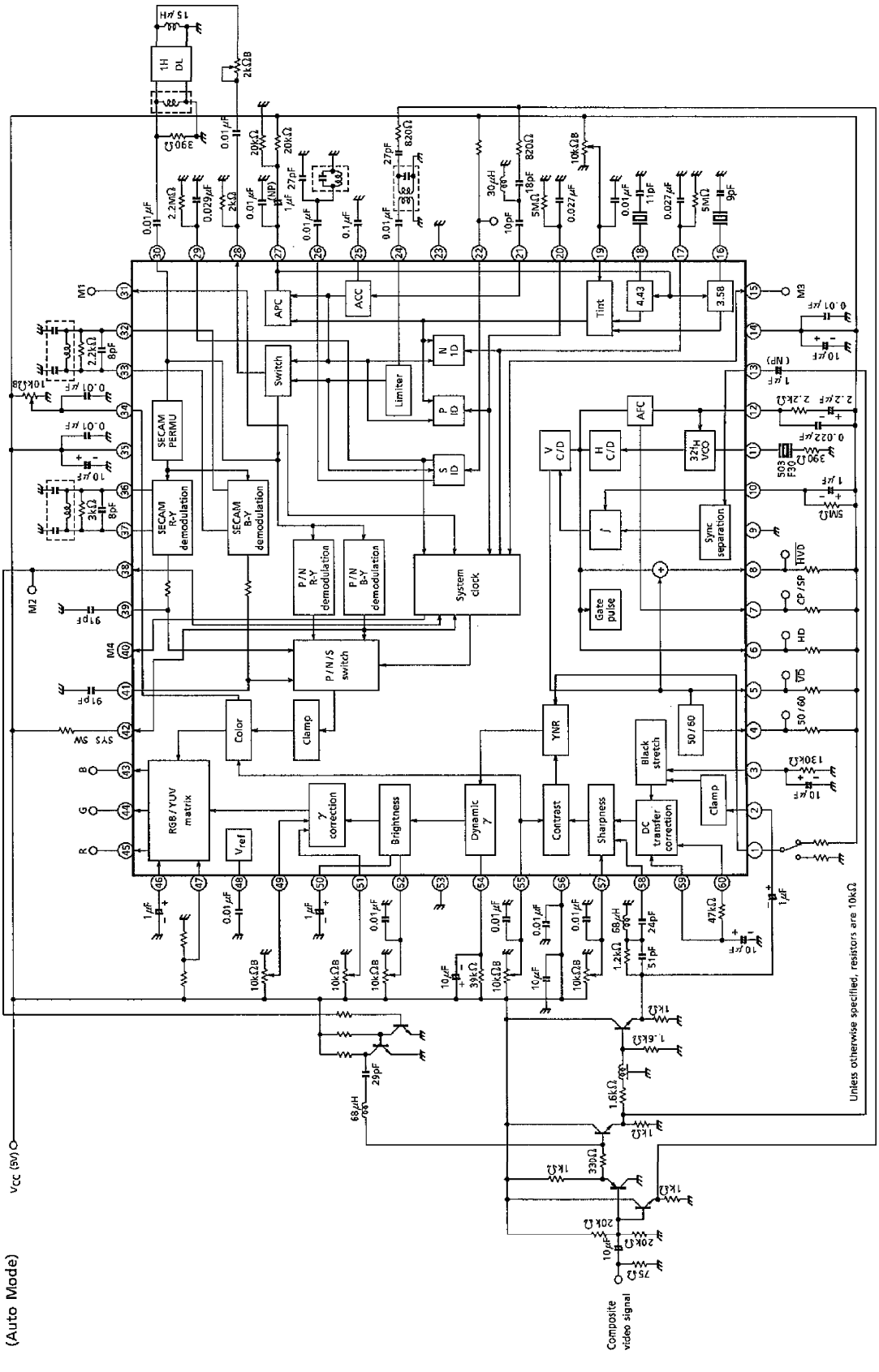

TA8795BF – 41

APPLICATION CIRCUIT EXAMPLE 1 South American Mode

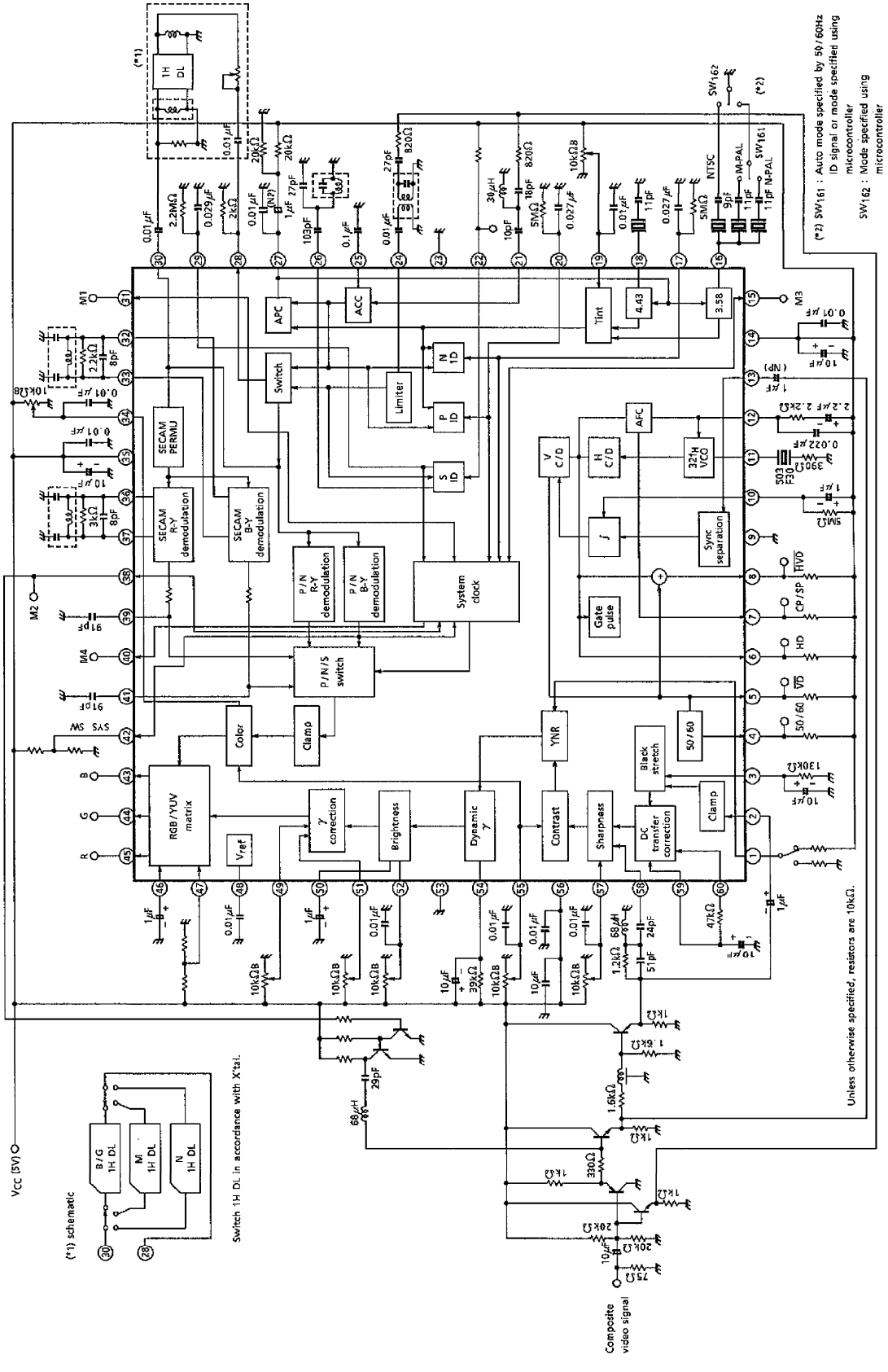

APPLICATION CIRCUIT EXAMPLE 1 Pseudo-PAL Mode

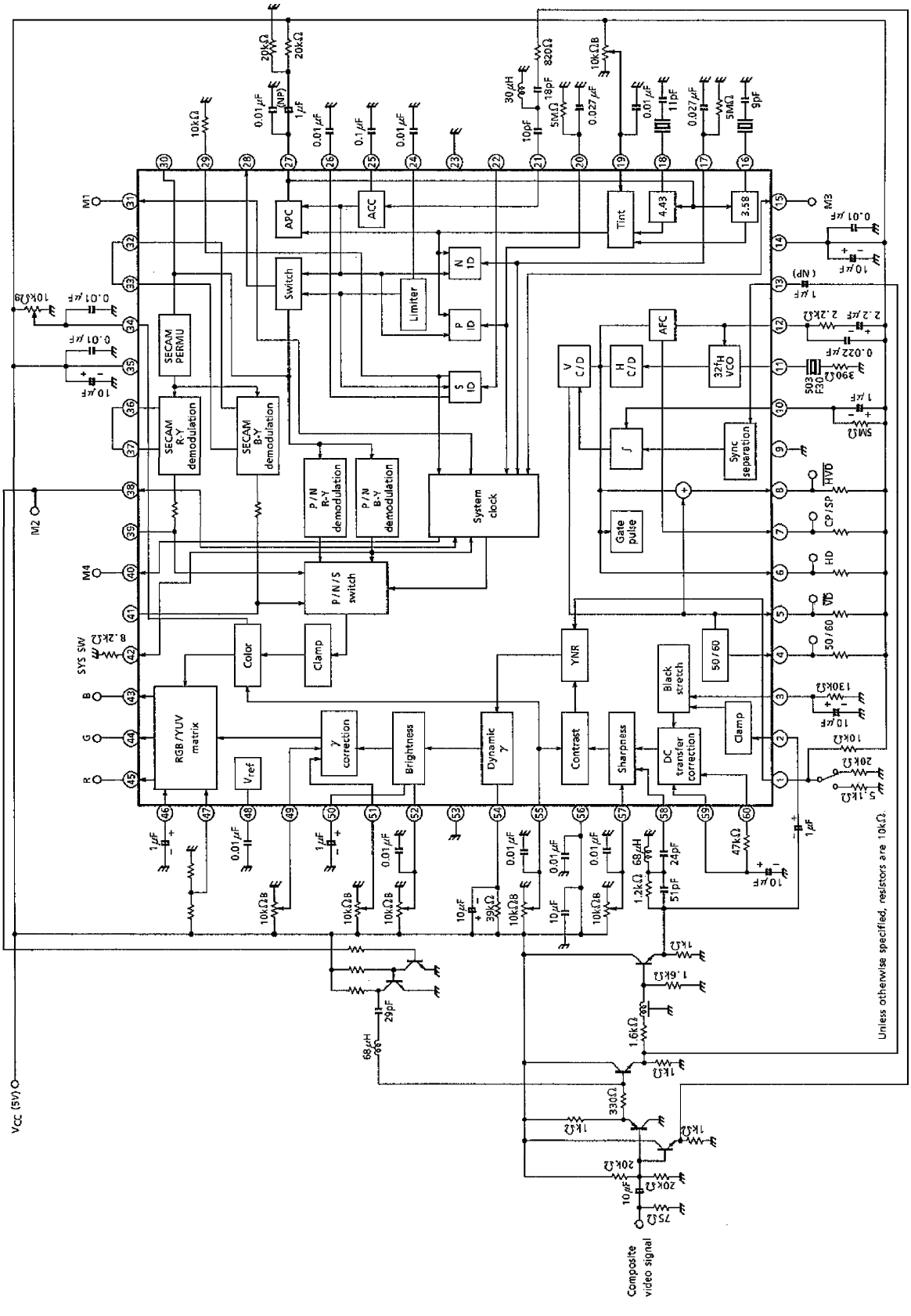

Peripheral Component Specifications

(1) Tank coil (bottom view)

TRF5414

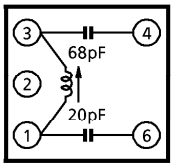

Lmin	20.0μH
Lmax	37.0μH
Q	26 (at Lmax)

TRF1093D

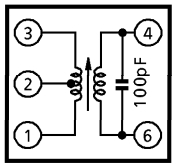

f_O max (at 4-6) = 4.9MHz (min)
f_O min (at 4-6) = 4.4MHz (max)
Q2 (at f_O min 4-6) = 68 ± 30%
L1 (at f_O min 1-3) = 9.1μH ± 30%
Qu (at f_O min 1-3) = 36 ± 30%
L2 (at f_O min 2-3) = 0.36μH ± 15%
Qu (at f_O min 2-3) = 5.8 ± 30%

TRF5418

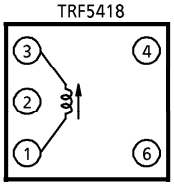

Lmin	5.2μH
Lmax	12.2μH
Q	57 (at L = 8.6μH)

TRF1092D

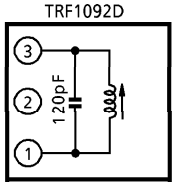

fmin	4.7MHz
fmax	7.4MHz
Q	75 (at fmin)

(2) X'tal

NTSC 3.579545MHz

Frequency accuracy	:	± 25ppm
Temperature coefficient	:	± 20ppm (– 10~75°C)
Load capacitance	:	16pF

PAL 4.433619MHz

Frequency accuracy	:	± 25ppm
Temperature coefficient	:	± 30ppm (– 10~75°C)
Load capacitance	:	16pF

Product recommended : NR-18 (Nippon Denpa Kogyo Corp.)

(3) 1H Delay line

Nominal frequency	:	4.433619MHz (f_O)
Insertion loss	:	10 ± 3dB (at f_O), delay time 63.945μs
3dB bandwidth	:	f_O ± 1.0MHz or more
不要反射	:	32dB 以上 (f_O ± 1MHz 内)

Product recommended : EFD-ED645A41T (Matsushita Electronics Corp.)

(4) 32f_H ceramic oscillator

Product recommended : CSB503F30 (Murata Mfg. Co., Ltd.)

OUTLINE DRAWING

QFP60-P-1414-0.80F

Unit : mm

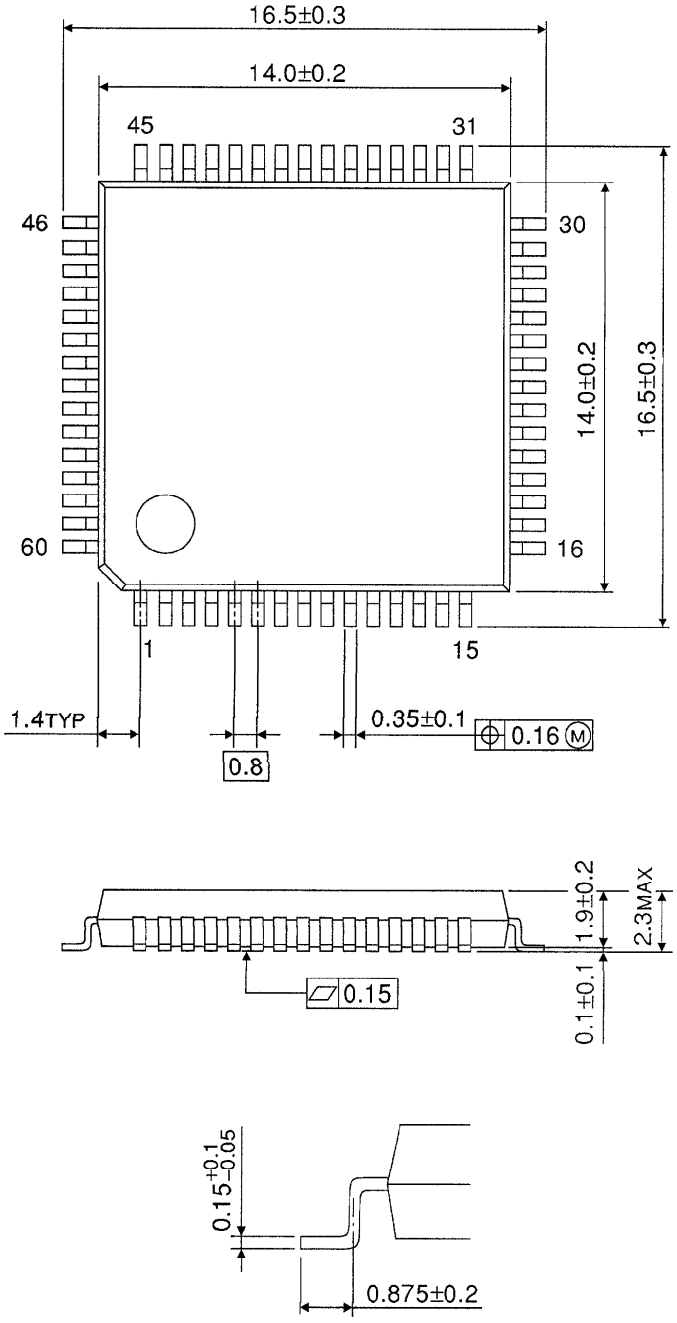

Weight : 0.8g (Typ.)