2.00mm (0.079") PITCH CONNECTOR

Wire-to-Board Housing

20015HS-NNL Series

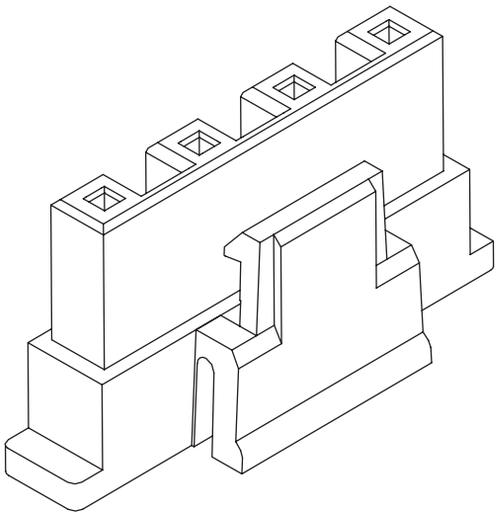

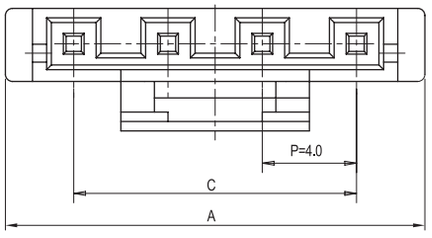

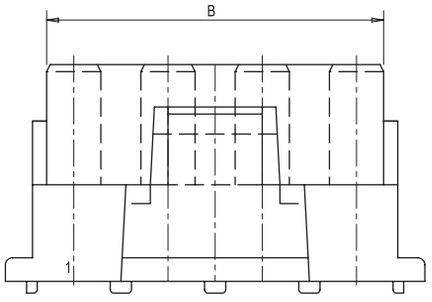

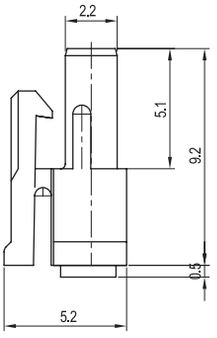

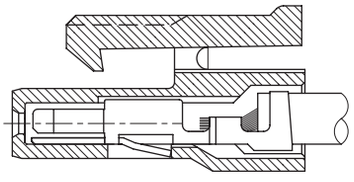

TERMINAL ASSEMBLY DRAWING

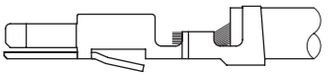

AWG : #22 ~ #28

Material

I/NO	DESCRIPTION	TITLE	MATERIAL
1	HOUSING	20015HS-NNL	PA66, UL 94V Grade

Available Pin

PARTS NO.	A	B	C
20015HS-02L	9.8	6.3	4.0
20015HS-03L	13.8	10.3	8.0
20015HS-04L	17.8	14.3	12.0

Specification

ITEM	SPEC
Voltage Rating	AC/DC 600V
Current Rating	AC/DC 1A
Operating Temperature	-25℃~+85℃
Contact Resistance	30mΩ MAX
Withstanding Voltage	AC1800V/1min
Insulation Resistance	1000MΩ MIN
Applicable Wire	AWG #22~#28
Applicable P.C.B	-
Applicable FPC/FFC	-
Solder Height	-
Crimp Tensile Strength	-
UL FILE NO	E108706

Application Terminal : 35001TS-L (179 page)